BS EN ISO 6947:2011

BSI Standards Publication

Welding and allied processes — Welding positions (ISO 6947:2011)

NO COPYING WITHOUT BSI PERMISSION EXCEPT AS PERMITTED BY COPYRIGHT LAW

raising standards worldwide™

National foreword

This British Standard is the UK implementation of EN ISO 6947:2011. It supersedes BS EN ISO 6947:1997 which is withdrawn.

The UK participation in its preparation was entrusted to Technical Committee WEE/1, Definitions and symbols for welding.

A list of organizations represented on this committee can be obtained on request to its secretary.

This publication does not purport to include all the necessary provisions of a contract. Users are responsible for its correct application.

© BSI 2011

ISBN 978 0 580 63499 4

ICS 25.160.40

Compliance with a British Standard cannot confer immunity from legal obligations.

This British Standard was published under the authority of the Standards Policy and Strategy Committee on 31 May 2011.

Amendments issued since publication

Date	Text affected

EUROPEAN STANDARD

NORME EUROPÉENNE

EUROPÄISCHE NORM

EN ISO 6947

May 2011

ICS 25.160.40

Supersedes EN ISO 6947:1997

English Version

Welding and allied processes - Welding positions (ISO 6947:2011)

Soudage et techniques connexes - Positions de soudage (ISO 6947:2011)

Schweißen und verwandte Prozesse - Schweißpositionen (ISO 6947:2011)

This European Standard was approved by CEN on 9 October 2010.

CEN members are bound to comply with the CEN/CENELEC Internal Regulations which stipulate the conditions for giving this European Standard the status of a national standard without any alteration. Up-to-date lists and bibliographical references concerning such national standards may be obtained on application to the CEN-CENELEC Management Centre or to any CEN member.

This European Standard exists in three official versions (English, French, German). A version in any other language made by translation under the responsibility of a CEN member into its own language and notified to the CEN-CENELEC Management Centre has the same status as the official versions.

CEN members are the national standards bodies of Austria, Belgium, Bulgaria, Croatia, Cyprus, Czech Republic, Denmark, Estonia, Finland, France, Germany, Greece, Hungary, Iceland, Ireland, Italy, Latvia, Lithuania, Luxembourg, Malta, Netherlands, Norway, Poland, Portugal, Romania, Slovakia, Slovenia, Spain, Sweden, Switzerland and United Kingdom.



EUROPEAN COMMITTEE FOR STANDARDIZATION
COMITÉ EUROPÉEN DE NORMALISATION
EUROPÄISCHES KOMITEE FÜR NORMUNG

Management Centre: Avenue Marnix 17, B-1000 Brussels

© 2011 CEN All rights of exploitation in any form and by any means reserved worldwide for CEN national Members.

Ref. No. EN ISO 6947:2011: E

Foreword

This document (EN ISO 6947:2011) has been prepared by Technical Committee ISO/TC 44 "Welding and allied processes" in collaboration with Technical Committee CEN/TC 121 “Welding” the secretariat of which is held by DIN.

This European Standard shall be given the status of a national standard, either by publication of an identical text or by endorsement, at the latest by November 2011, and conflicting national standards shall be withdrawn at the latest by November 2011.

Attention is drawn to the possibility that some of the elements of this document may be the subject of patent rights. CEN [and/or CENELEC] shall not be held responsible for identifying any or all such patent rights.

This document supersedes EN ISO 6947:1997.

According to the CEN/CENELEC Internal Regulations, the national standards organizations of the following countries are bound to implement this European Standard: Austria, Belgium, Bulgaria, Croatia, Cyprus, Czech Republic, Denmark, Estonia, Finland, France, Germany, Greece, Hungary, Iceland, Ireland, Italy, Latvia, Lithuania, Luxembourg, Malta, Netherlands, Norway, Poland, Portugal, Romania, Slovakia, Slovenia, Spain, Sweden, Switzerland and the United Kingdom.

Endorsement notice

The text of ISO 6947:2011 has been approved by CEN as a EN ISO 6947:2011 without any modification.

Contents

Page

Foreword ..... **iv**

Introduction ..... **v**

1 Scope **1**

2 Terms and definitions **1**

3 Welding positions **1**
3.1 Main welding positions **1**
3.2 Welding positions for production **5**
3.3 Welding positions for testing **5**

4 Designation **5**

Annex A (informative) **Limits of the slope of a weld axis and the rotation of the weld face about the weld axis for welding positions in production welds** **7**

Annex B (informative) **Comparison of international, European and US designations** **13**

Bibliography **17**

© ISO 2011 – All rights reserved

Foreword

ISO (the International Organization for Standardization) is a worldwide federation of national standards bodies (ISO member bodies). The work of preparing International Standards is normally carried out through ISO technical committees. Each member body interested in a subject for which a technical committee has been established has the right to be represented on that committee. International organizations, governmental and non-governmental, in liaison with ISO, also take part in the work. ISO collaborates closely with the International Electrotechnical Commission (IEC) on all matters of electrotechnical standardization.

International Standards are drafted in accordance with the rules given in the ISO/IEC Directives, Part 2.

The main task of technical committees is to prepare International Standards. Draft International Standards adopted by the technical committees are circulated to the member bodies for voting. Publication as an International Standard requires approval by at least 75 % of the member bodies casting a vote.

Attention is drawn to the possibility that some of the elements of this document may be the subject of patent rights. ISO shall not be held responsible for identifying any or all such patent rights.

ISO 6947 was prepared by Technical Committee ISO/TC 44, *Welding and allied processes*, Subcommittee SC 7, *Representation and terms*.

This third edition cancels and replaces the second edition (ISO 6947:1990), which has been technically revised.

Requests for official interpretations of any aspect of this International Standard should be directed to the Secretariat of ISO/TC 44/SC 7 via your national standards body. A complete listing of these bodies can be found at www.iso.org.

© ISO 2011 – All rights reserved

Introduction

This International Standard provides positions for standard discrete test piece orientation PA, PB, H-L045, etc. that have been specified in this International Standard since the first edition (ISO 6947:1980).

In this revision, positions are defined for production welding. These positions are flat, horizontal, vertical, and overhead. Unlike testing positions, these positions are contiguous.

The direction of welding is an essential parameter for determining the welding position, e.g. up or down.

The welding position is not dependent on the geometrical arrangement of the joint, e.g. butt or fillet joint, or that of the semi-finished product. Welds of all types and in all directions are covered.

The main positions have been given symbols which can easily be used for designation purposes; these symbols were chosen independently of possible meaningful abbreviations, i.e. they are not derived from any particular language.

The relationship between testing positions and production welding positions is specified elsewhere, e.g. in ISO 9606[1] or ISO 15614[2].

© ISO 2011 – All rights reserved

INTERNATIONAL STANDARD **ISO 6947:2011(E)**

Welding and allied processes — Welding positions

1 Scope

This International Standard defines welding positions for testing and production, for butt and fillet welds, in all product forms.

Annex A gives examples of the limits of the slope of a weld axis and the rotation of the weld face about the weld axis for welding positions in production welds.

Annex B provides a comparison of International, European and US designations.

2 Terms and definitions

For the purposes of this document, the following terms and definitions apply.

2.1
welding position
position of a weld in space, which is defined relative to the slope of the axis and rotation of the face of the weld relative to the horizontal plane

2.2
main welding position
welding position, designated PA, PB, PC, PD, PE, PF or PG

NOTE For PA, PB, PC, PD and PE, see Figure 1.

2.3
slope
S
angle of the axis of the weld relative to the main welding position

2.4
rotation
R
angle of the face of the weld relative to the main welding position

2.5
inclined angle
L
angle of the axis of the pipe

3 Welding positions

3.1 Main welding positions

The main welding positions are illustrated in Figure 1 with examples of their application for butt and fillet welds in Figure 2.

© ISO 2011 – All rights reserved

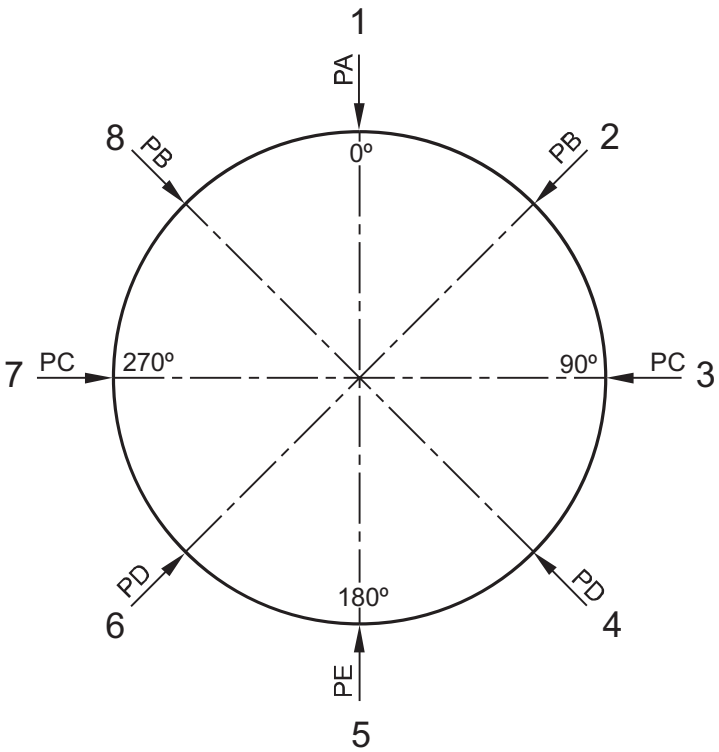

Key

1	flat	4 and 6	horizontal overhead
2 and 8	horizontal vertical	5	overhead
3 and 7	horizontal		

Figure 1 — Main welding positions

Examples of main welding positions for butt and fillet welds are illustrated in Figure 2.

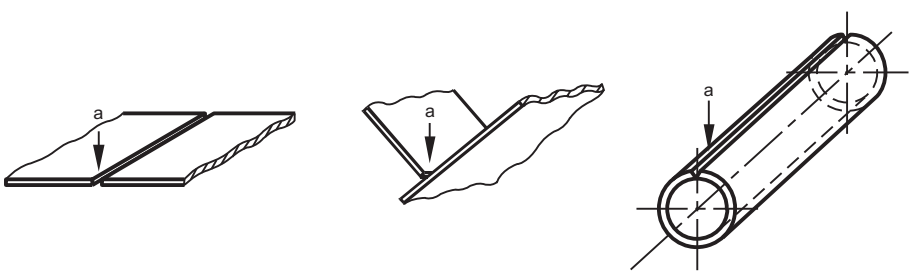

[a] Arrow shows welding position.

a) PA: flat position

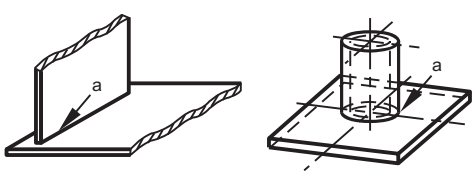

[a] Arrow shows welding position.

b) PB: horizontal vertical position

Figure 2 — Examples of main welding positions (*continued*)

© ISO 2011 – All rights reserved

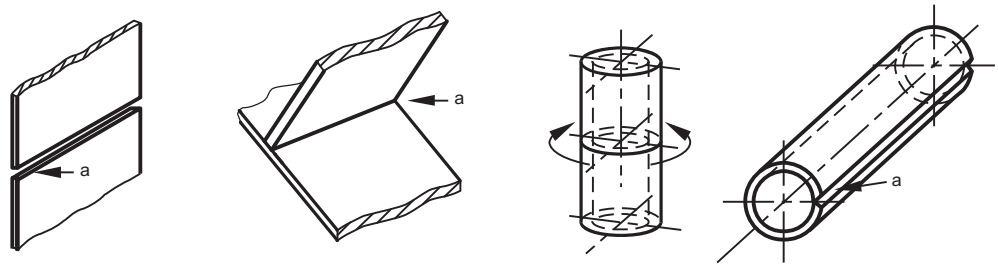

[a] Arrow shows welding position.

c) PC: horizontal position

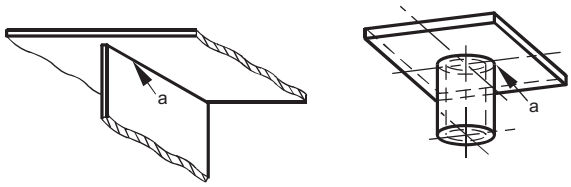

[a] Arrow shows welding position.

d) PD: horizontal overhead position

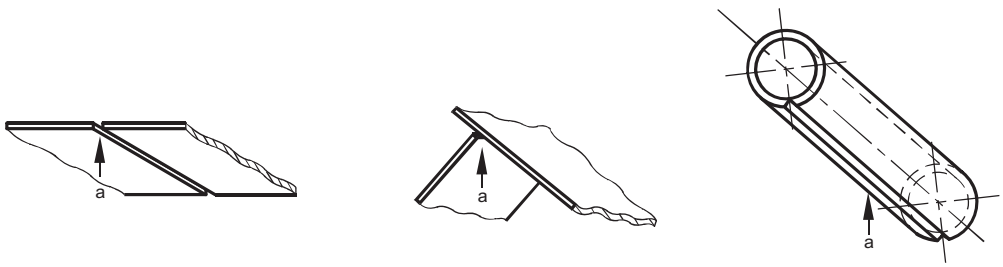

[a] Arrow shows welding position.

e) PE: overhead position

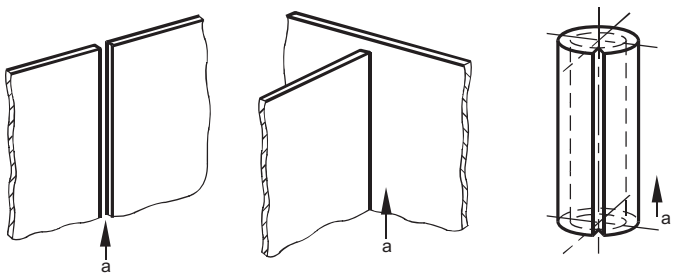

[a] Arrow shows weld progression or direction.

f) PF: vertical up position

Figure 2 — Examples of main welding positions (*continued*)

© ISO 2011 – All rights reserved

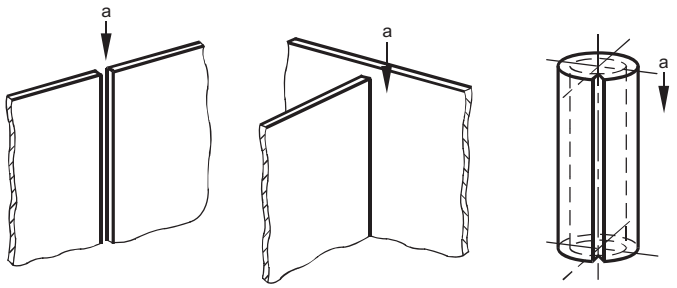

a Arrow shows weld progression or direction.

g) PG: vertical down position

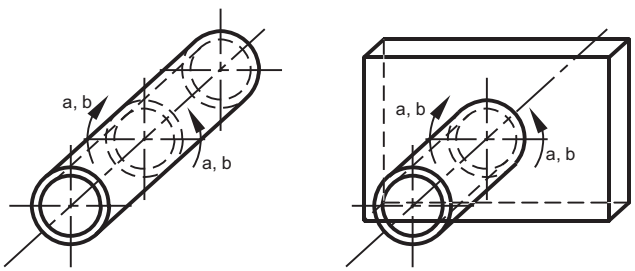

a Arrow shows weld progression or direction.

b For special purposes, e. g. testing of welders; this position is regarded as a main position.

h) PH: pipe position for welding upwards

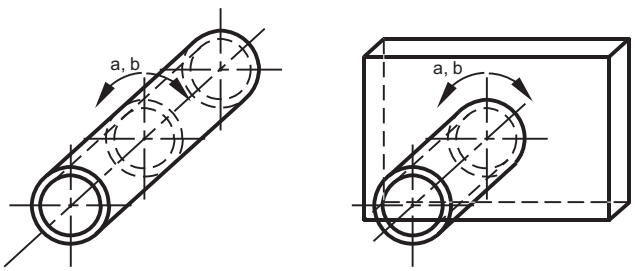

a Arrow shows weld progression or direction.

b For special purposes, e. g. testing of welders; this position is regarded as a main position.

i) PJ: pipe position for welding downwards

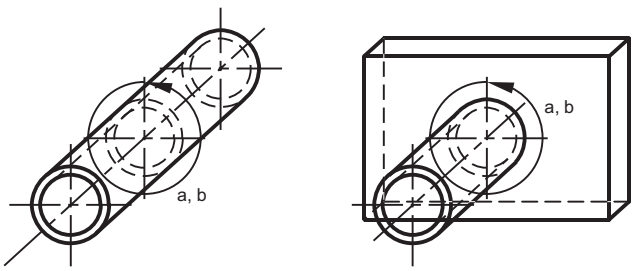

a Arrow shows weld progression or direction.

b For special purposes, e. g. testing of welders; this position is regarded as a main position.

j) PK: pipe position for orbital welding

Figure 2 — Examples of main welding positions

© ISO 2011 – All rights reserved

3.2 Welding positions for production

Main welding positions can be used in other standards, e.g. ISO 9606[1], ISO 15614[2], to define the orientation of welds in production welding after qualifying in one of the main welding positions PA, PB, H-L045, etc. Slope and rotation ranges for welding positions in production are given in Table 1 for butt welds and in Table 2 for fillet welds (see also examples in Annex A).

NOTE For asymmetric tolerances, plus means revolving the weld surface towards the main welding position PA and minus towards the main welding position PE.

Table 1 — Slope and rotation ranges for welding positions in production butt welds

Welding position	Main welding position	Slope S	Rotation R
Flat	PA	±15°	±30°
Horizontal	PC	±15°	+60° −10°
Overhead	PE	±80°	±80°
Vertical	PF, PG	+75° −10°	±100° ±180°

Table 2 — Slope and rotation ranges for welding positions in production fillet welds

Welding position	Main welding position	Slope S	Rotation R
Flat	PA	±15°	±30°
Horizontal vertical	PB	±15°	+15° −10°
Horizontal	PC	±15°	+35° −10°
Horizontal overhead	PD	±80°	+35° −10°
Overhead	PE	±80°	±35°
Vertical	PF, PG	+75° −10°	±100° ±180°

3.3 Welding positions for testing

Welding positions used during welding of a test piece shall not exceed ±5° in slope and ±10° in rotation from the main welding position.

4 Designation

Main welding positions shall be designated by the appropriate symbol in accordance with Figures 1 and 2 (see Example 1). The symbol for the main welding position may be supplemented by the values for slope and rotation, given in three digits (see Example 2).

For circumferential welds in pipes with inclined axes, the indication of slope and rotation shall be simplified in accordance with Figures 1 and 2 (see Examples 3 and 4).

© ISO 2011 – All rights reserved

EXAMPLE 1 The main welding position “horizontal vertical” (PB) shall be designated as follows:

PB

EXAMPLE 2 The main welding position “horizontal vertical” (PB), with slope of 15° and rotation of 10°, shall be designated as follows:

PB 015-010

EXAMPLE 3 The welding position on pipes with inclined axes, with welding direction “welding up” (H) and an inclined angle of 30°, shall be designated as follows:

H-L030

EXAMPLE 4 The welding position on pipes with inclined axes, with welding direction “welding down” (J) and an inclined angle of 60°, shall be designated as follows:

J-L060

© ISO 2011 – All rights reserved

Annex A
(informative)

Limits of the slope of a weld axis and the rotation of the weld face about the weld axis for welding positions in production welds

This annex describes, through a series of sketches, the limits of the slope of a weld axis and the rotation of the weld face about the weld axis for welding positions in production welds (see 3.2 and Tables 1 and 2).

Figures A.1 to A.15 show sketches for butt welds and Figures A.16 to A.21 show sketches for fillet welds.

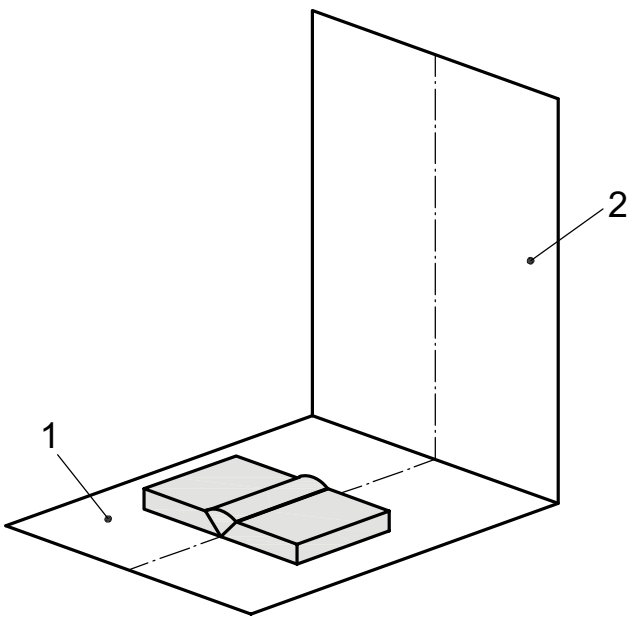

Key
1 horizontal plane
2 vertical plane

Figure A.1 — Main welding position (PA)

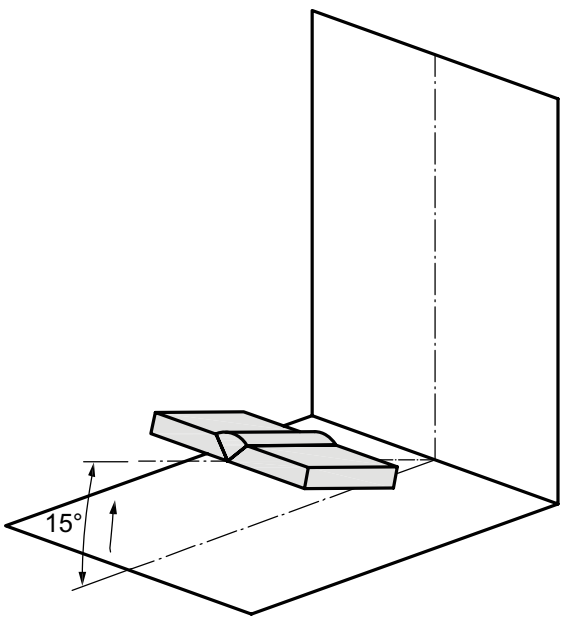

Figure A.2 — Flat position (PA) slope limit

© ISO 2011 – All rights reserved

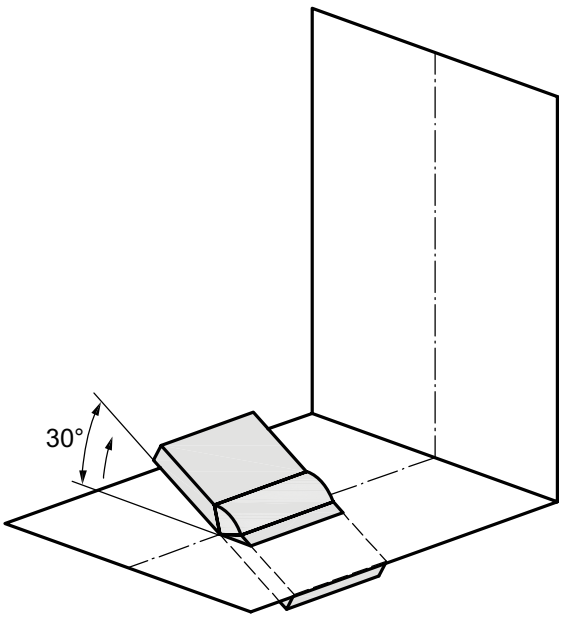

Figure A.3 — Flat position (PA) rotation limit

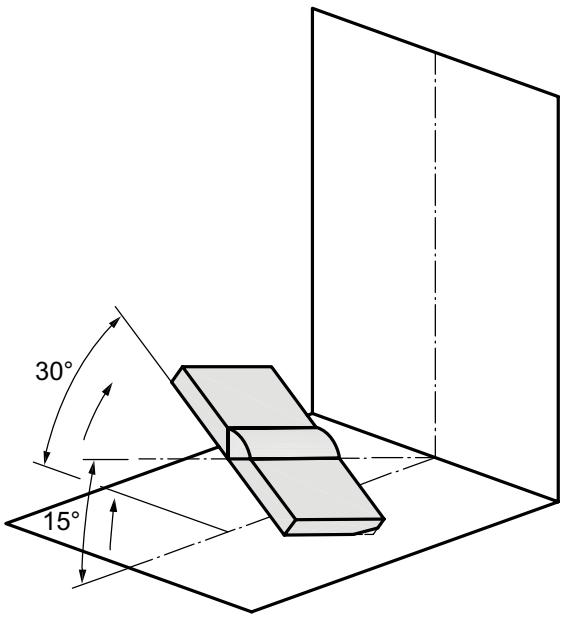

Figure A.4 — Flat position (PA) slope limit and rotation limit

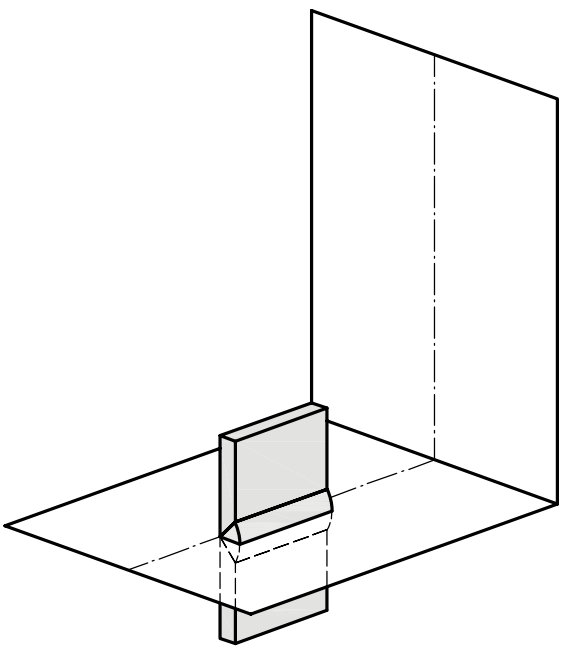

Figure A.5 — Main welding position (PC)

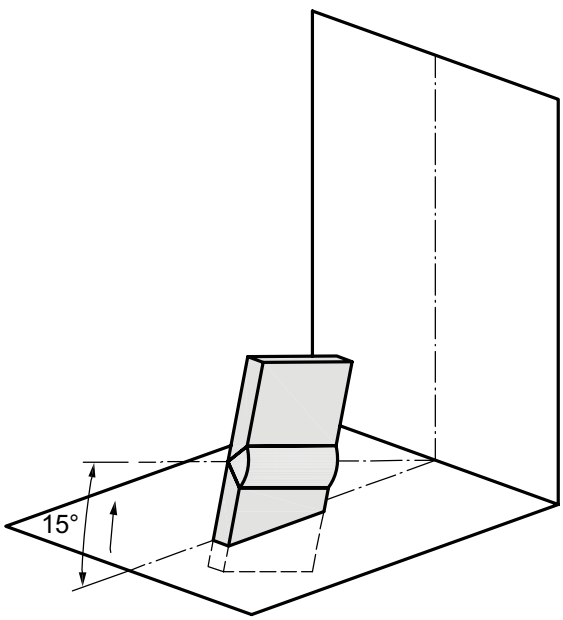

Figure A.6 — Horizontal position (PC) slope limit

© ISO 2011 – All rights reserved

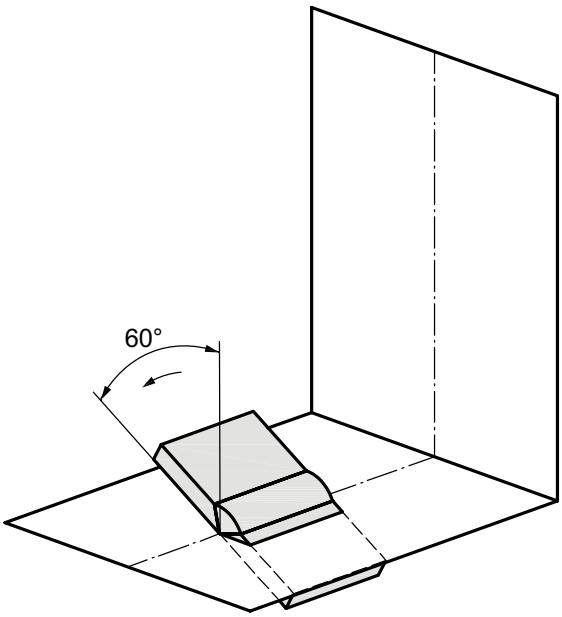

Figure A.7 — Horizontal position (PC) rotation limit (+60°)

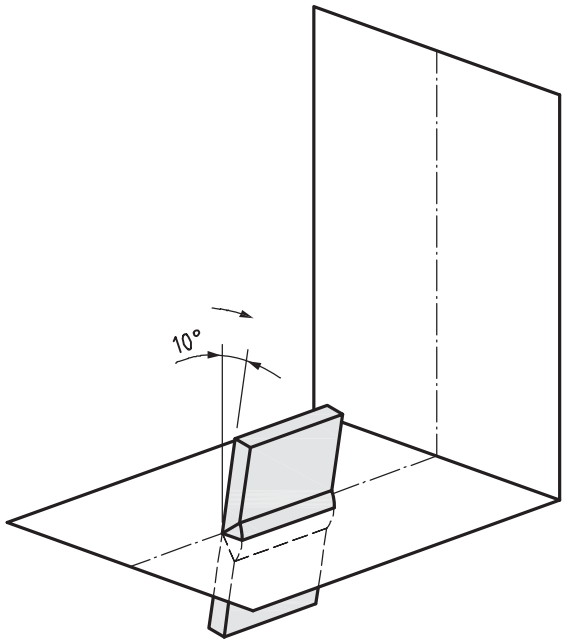

Figure A.8 — Horizontal position (PC) rotation limit (–10°)

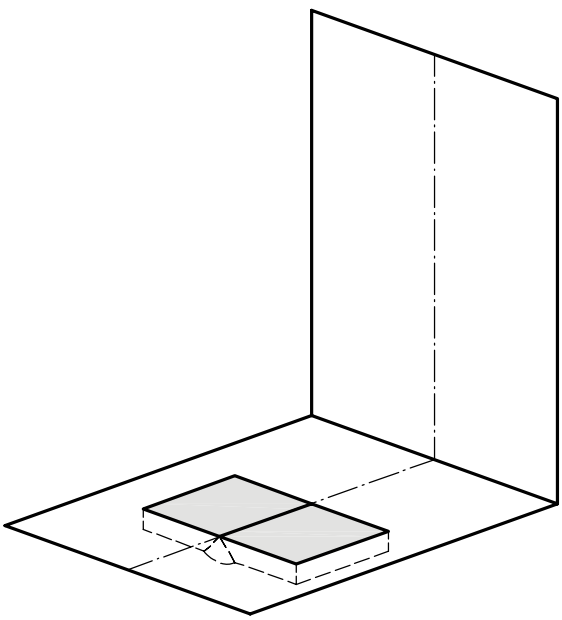

Figure A.9 — Main welding position (PE)

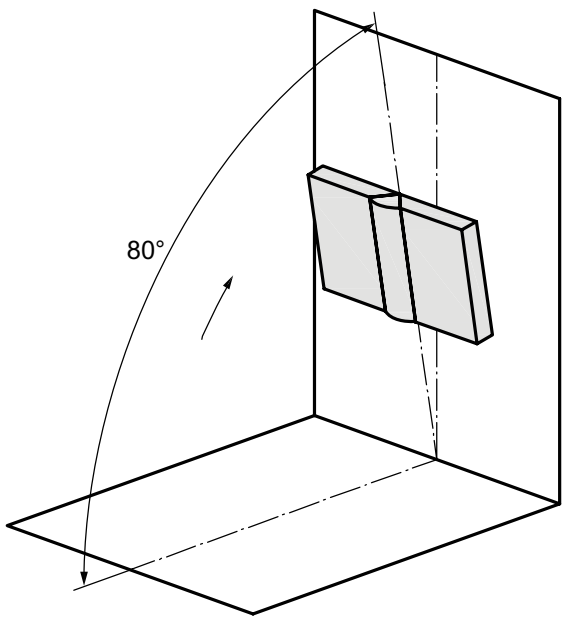

Figure A.10 — Overhead position (PE) slope limit

© ISO 2011 – All rights reserved

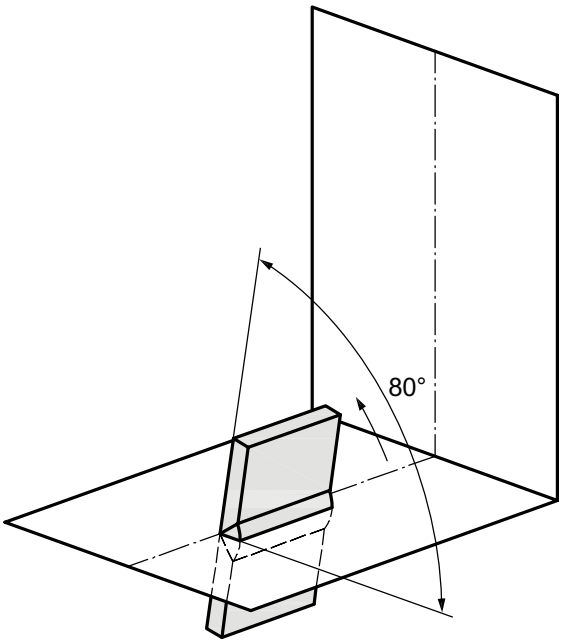

Figure A.11 — Overhead position (PE) rotation limit

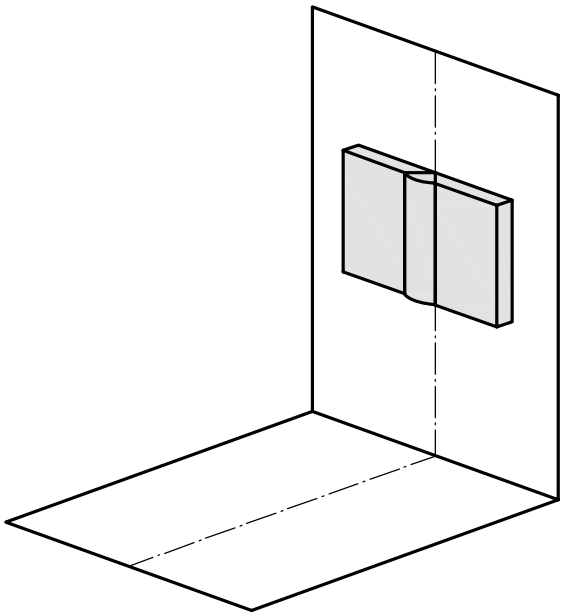

Figure A.12 — Main welding position (PF, PG)

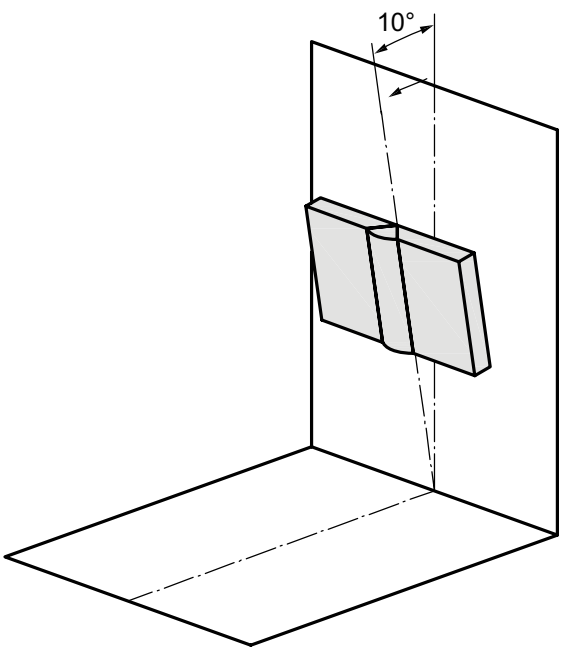

Figure A.13 — Welding position (PF, PG) slope limit

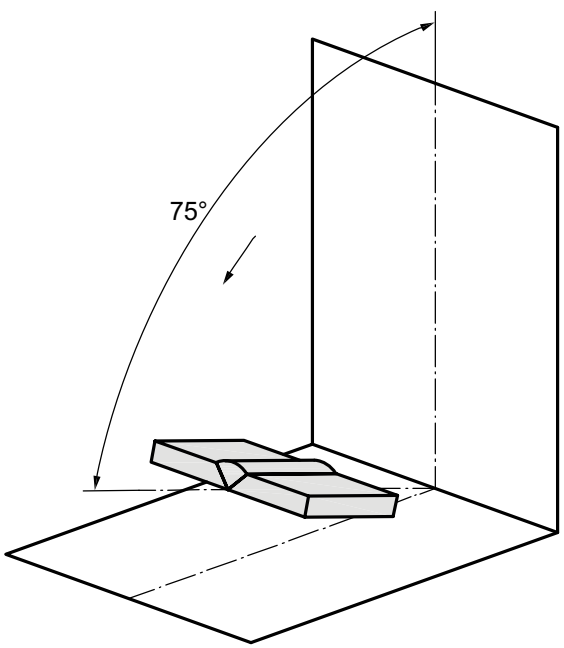

Figure A.14 — Welding position (PF, PG) slope limit

© ISO 2011 – All rights reserved

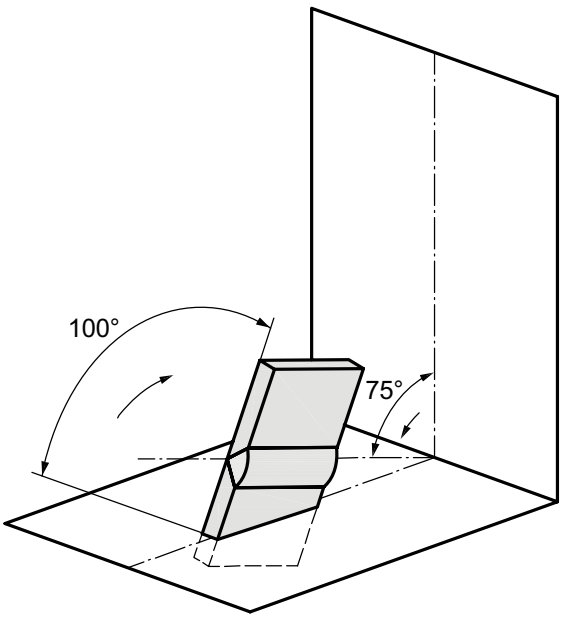

Figure A.15 — Welding position (PF, PG) slope limit and rotation limit

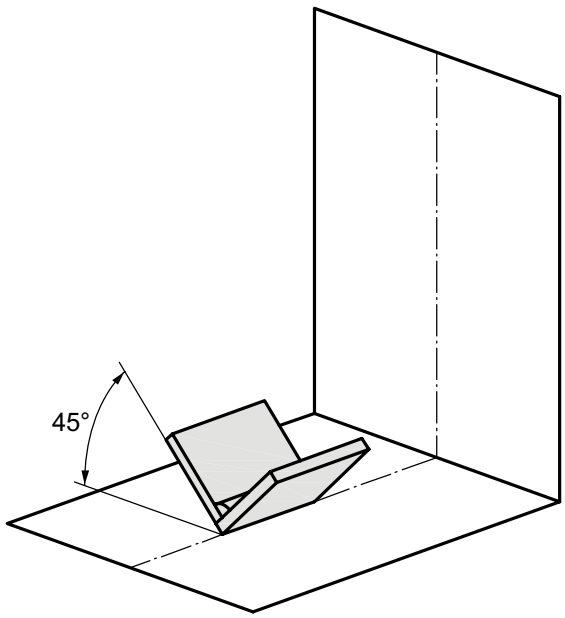

Figure A.16 — Main welding position (PA)

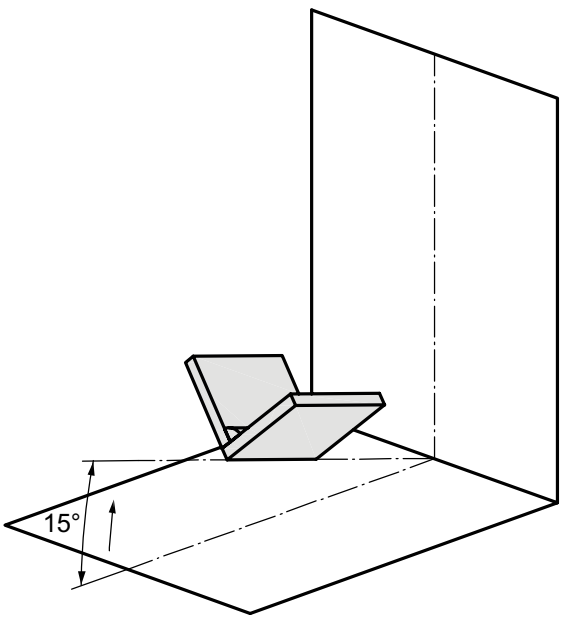

Figure A.17 — Welding position (PA) slope limit

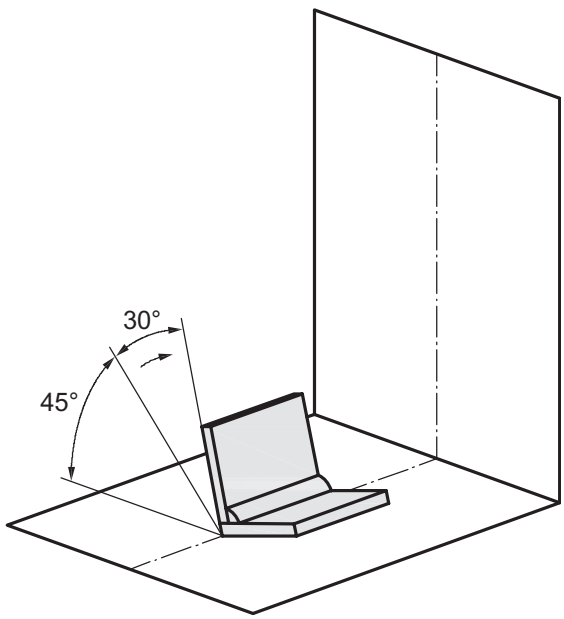

Figure A.18 — Welding position (PA) rotation limit

© ISO 2011 – All rights reserved

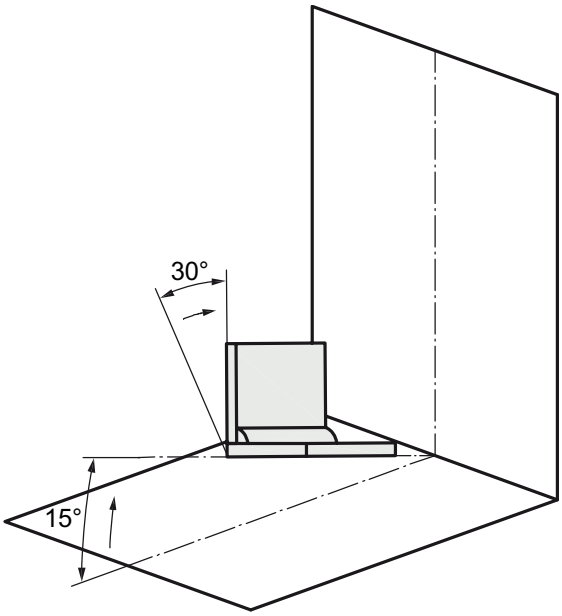

Figure A.19 — Welding position (PA) slope limit and rotation limit

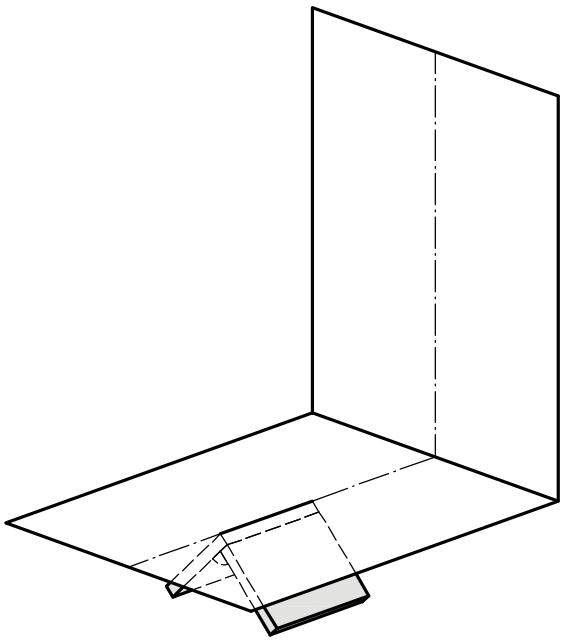

Figure A.20 — Main welding position (PE)

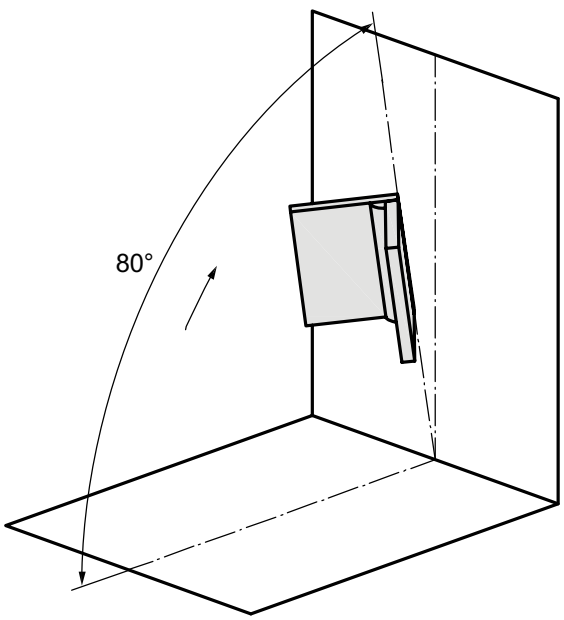

Figure A.21 — Overhead welding position (PE) slope limit

© ISO 2011 – All rights reserved

Annex B
(informative)

Comparison of international, European and US designations

Table B.1 provides a comparison between the common welding positions shown in this International Standard and the joint orientations shown in AWS A3.0[4] and ASME Section IX[3].

NOTE This annex is based on CEN/TR 14633[5].

Table B.1 — Comparison of international, European and US designations for working and welding positions

Illustration	Welding position according to AWS A3.0[4] ASME Section IX[3]	Welding position according to this International Standard
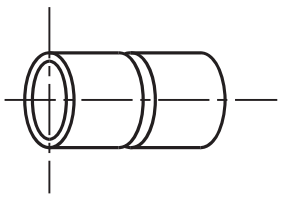 flat position (pipe rotating) 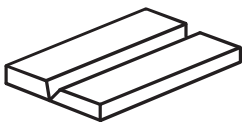 flat position	1G	PA
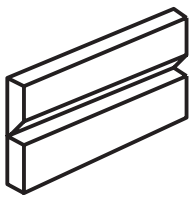 horizontal position 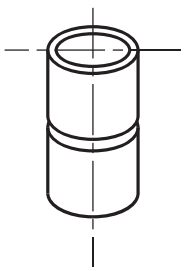 horizontal position	2G	PC
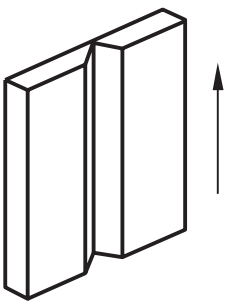 vertical up position	3G uphill	PF

© ISO 2011 – All rights reserved

Table B.1 (*continued*)

Illustration	Welding position according to AWS A3.0[4] ASME Section IX[3]	Welding position according to this International Standard
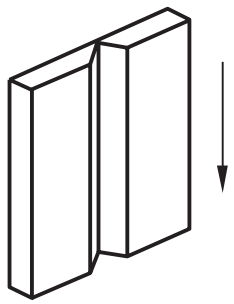 vertical down position	3G downhill	PG
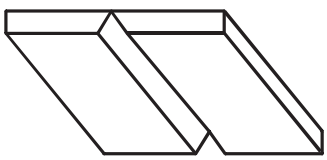 overhead position	4G	PE
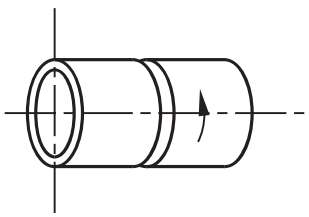 vertical up position (pipe fixed)	5G uphill	PH
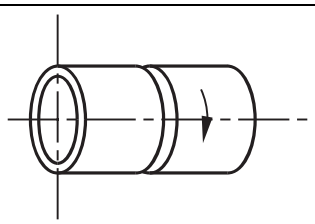 vertical down position (pipe fixed)	5G downhill	PJ
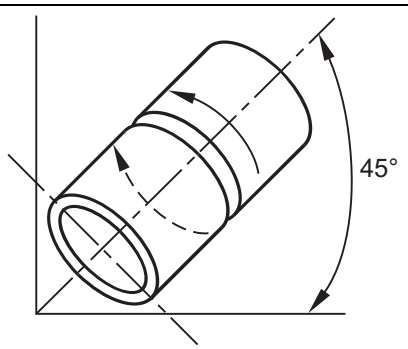 inclined position (pipe fixed) welding upwards	6G uphill	H-L045

© ISO 2011 – All rights reserved

Table B.1 (*continued*)

Illustration	Welding position according to AWS A3.0[4] ASME Section IX[3]	Welding position according to this International Standard
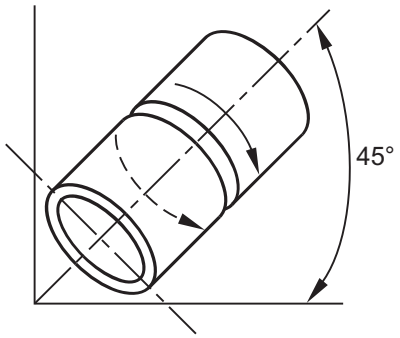 inclined position (pipe fixed) welding downwards	6G downhill	J-L045
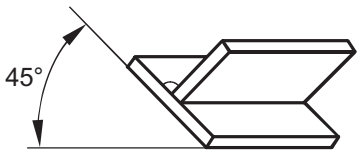 flat position	1F	PA
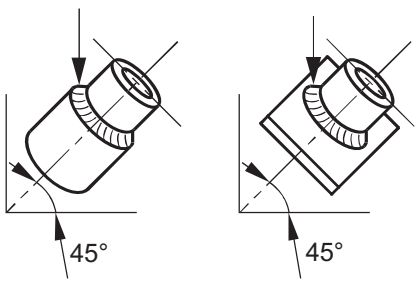 flat position (pipe rotating)	1FR	PA
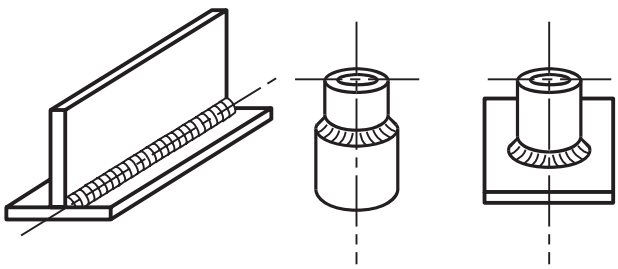 horizontal vertical position	2F	PB
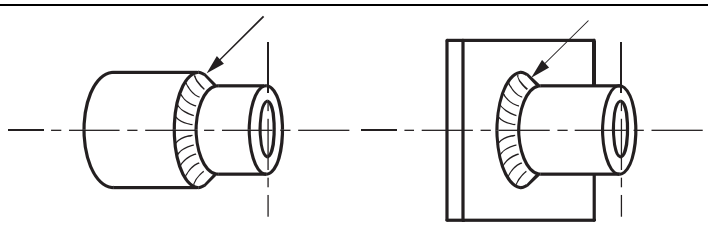 horizontal vertical position (pipe rotated)	2FR	PB

© ISO 2011 – All rights reserved

Table B.1 (*continued*)

Illustration	Welding position according to AWS A3.0[4] ASME Section IX[3]	Welding position according to this International Standard
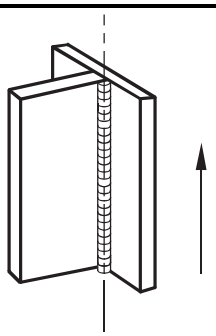 vertical up position	3F uphill	PF
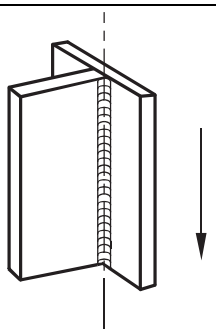 vertical down position	3F downhill	PG
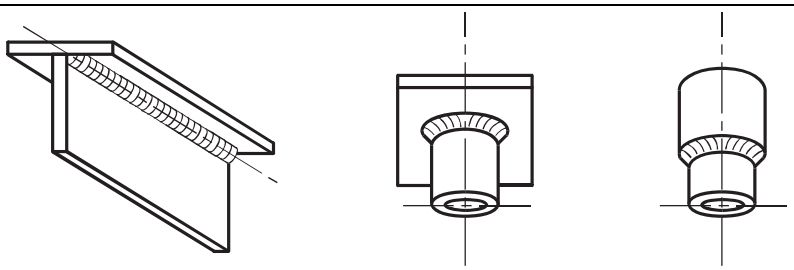 horizontal overhead position	4F	PD
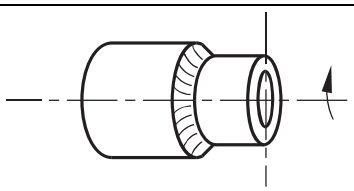 vertical up position (pipe fixed)	5F uphill	PH
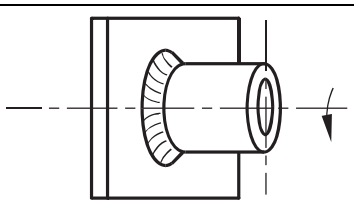 vertical down position (pipe fixed)	5F downhill	PJ

© ISO 2011 – All rights reserved

Bibliography

[1] ISO 9606 (all parts), *Approval testing of welders — Fusion welding*

[2] ISO 15614 (all parts), *Specification and qualification of welding procedures for metallic materials — Welding procedure test*

[3] ASME Section IX, *ASME boiler and pressure vessel code — Section IX: Welding and brazing qualifications*

[4] AWS A3.0, *Standard welding terms and definitions including terms for adhesive bonding, brazing, soldering, thermal cutting, and thermal spraying*

[5] CEN/TR 14633, *Welding — Working positions — Comparison of current international, European and US designations*

© ISO 2011 – All rights reserved

This page deliberately left blank

This page deliberately left blank

British Standards Institution (BSI)

BSI is the independent national body responsible for preparing British Standards and other standards-related publications, information and services.
It presents the UK view on standards in Europe and at the international level.

It is incorporated by Royal Charter.

Revisions

British Standards are updated by amendment or revision. Users of British Standards should make sure that they possess the latest amendments or editions.

It is the constant aim of BSI to improve the quality of our products and services. We would be grateful if anyone finding an inaccuracy or ambiguity while using this British Standard would inform the Secretary of the technical committee responsible, the identity of which can be found on the inside front cover.

Tel: +44 (0)20 8996 9001 Fax: +44 (0)20 8996 7001

BSI offers Members an individual updating service called PLUS which ensures that subscribers automatically receive the latest editions of standards.

Tel: +44 (0)20 8996 7669 Fax: +44 (0)20 8996 7001
Email: plus@bsigroup.com

Buying standards

You may buy PDF and hard copy versions of standards directly using a credit card from the BSI Shop on the website **www.bsigroup.com/shop.** In addition all orders for BSI, international and foreign standards publications can be addressed to BSI Customer Services.

Tel: +44 (0)20 8996 9001 Fax: +44 (0)20 8996 7001
Email: orders@bsigroup.com

In response to orders for international standards, it is BSI policy to supply the BSI implementation of those that have been published as British Standards, unless otherwise requested.

Information on standards

BSI provides a wide range of information on national, European and international standards through its Knowledge Centre.

Tel: +44 (0)20 8996 7004 Fax: +44 (0)20 8996 7005
Email: knowledgecentre@bsigroup.com

Various BSI electronic information services are also available which give details on all its products and services.

Tel: +44 (0)20 8996 7111 Fax: +44 (0)20 8996 7048
Email: info@bsigroup.com

BSI Subscribing Members are kept up to date with standards developments and receive substantial discounts on the purchase price of standards. For details of these and other benefits contact Membership Administration.

Tel: +44 (0)20 8996 7002 Fax: +44 (0)20 8996 7001
Email: membership@bsigroup.com

Information regarding online access to British Standards via British Standards Online can be found at **www.bsigroup.com/BSOL**

Further information about BSI is available on the BSI website at **www.bsigroup.com/standards**

Copyright

Copyright subsists in all BSI publications. BSI also holds the copyright, in the UK, of the publications of the international standardization bodies. Except as permitted under the Copyright, Designs and Patents Act 1988 no extract may be reproduced, stored in a retrieval system or transmitted in any form or by any means – electronic, photocopying, recording or otherwise – without prior written permission from BSI. This does not preclude the free use, in the course of implementing the standard of necessary details such as symbols, and size, type or grade designations. If these details are to be used for any other purpose than implementation then the prior written permission of BSI must be obtained. Details and advice can be obtained from the Copyright & Licensing Manager.

Tel: +44 (0)20 8996 7070
Email: copyright@bsigroup.com

BSI Group Headquarters

389 Chiswick High Road London W4 4AL UK

Tel +44 (0)20 8996 9001
Fax +44 (0)20 8996 7001
www.bsigroup.com/standards

raising standards worldwide™