Document: ISO/TC 44/SC 7
N 320

Our ref: BSI - GB

Date: 09 February 2005

Secretariat of ISO/TC 44/SC 7
Welding - Representation and terms

ISO/WD 6947 - Welding — Definitions of testing positions and production welding positions — Complementary element

Dear Member

Attached pleaese find the ISO Working Draft 'ISO/WD 6947 - Welding — Definitions of testing positions and production welding positions — Complementary element ', prepared by the US.

Please send any comments you may have to the undersigned by

29 April 2005

Yours sincerely,

Bernd Borchert
Secretary to ISO/TC 44/SC 7
bernd.borchert@bsi-global.com

© ISO 2005 – All rights reserved

ISO TC 44/SC 7 N

Date: 2005-02-7

ISO/WD 6947

ISO TC 44/SC 7/WG

Secretariat: AFNOR

Welding — Definitions of testing positions and production welding positions — Complementary element

Soudage —

Warning

This document is not an ISO International Standard. It is distributed for review and comment. It is subject to change without notice and may not be referred to as an International Standard.

Recipients of this draft are invited to submit, with their comments, notification of any relevant patent rights of which they are aware and to provide supporting documentation.

Document type: International Standard
Document subtype:
Document stage: (20) Preparatory
Document language: E

C:\Documents and Settings\adavis.AWS\Desktop\6947 draft\ISO_6947_(E).doc STD Version 2.1c2

Copyright notice

This ISO document is a working draft or committee draft and is copyright-protected by ISO. While the reproduction of working drafts or committee drafts in any form for use by participants in the ISO standards development process is permitted without prior permission from ISO, neither this document nor any extract from it may be reproduced, stored or transmitted in any form for any other purpose without prior written permission from ISO.

Requests for permission to reproduce this document for the purpose of selling it should be addressed as shown below or to ISO's member body in the country of the requester:

[Indicate the full address, telephone number, fax number, telex number, and electronic mail address, as appropriate, of the Copyright Manger of the ISO member body responsible for the secretariat of the TC or SC within the framework of which the working document has been prepared.]

Reproduction for sales purposes may be subject to royalty payments or a licensing agreement.

Violators may be prosecuted.

© ISO 2005 – All rights reserved

Contents

Page

Foreword ..... **iv**

Introduction ..... **v**

1 Scope **1**

2 Terms and definitions **1**

3 Working positions **3**
3.1 Testing positions **3**
3.2 Production welding positions **7**

4 Designation **7**

Annex A (informative) **Limits of the slope of a weld axis and the rotation of the weld face about the weld axis for production welding positions** **10**

© ISO 2005 – All rights reserved

Foreword

ISO (the International Organization for Standardization) is a worldwide federation of national standards bodies (ISO member bodies). The work of preparing International Standards is normally carried out through ISO technical committees. Each member body interested in a subject for which a technical committee has been established has the right to be represented on that committee. International organizations, governmental and non-governmental, in liaison with ISO, also take part in the work. ISO collaborates closely with the International Electrotechnical Commission (IEC) on all matters of electrotechnical standardization.

International Standards are drafted in accordance with the rules given in the ISO/IEC Directives, Part 2.

The main task of technical committees is to prepare International Standards. Draft International Standards adopted by the technical committees are circulated to the member bodies for voting. Publication as an International Standard requires approval by at least 75 % of the member bodies casting a vote.

ISO 6947 was prepared by Technical Committee ISO/TC 44, *Welding and allied processes*, Subcommittee SC 7, *Representation and terms*.

This third edition cancels and replaces the second edition which has been technically revised.

© ISO 2005 – All rights reserved

Introduction

The working positions are valid for welds in plates and pipes.

The direction of welding is an essential parameter for determining the working position, e.g. up or down.

The working position is not dependent on the geometrical arrangement of the joint, e.g. butt or fillet joint, or that of the semi-finished product. Welds in all types and all directions are covered.

The main positions have been given symbols which can easily be used for designation purposes; these symbols were chosen independently of possible meaningful abbreviations, i.e. they are not derived from any particular language. The centreline is normally identical with the position of the stick electrode. The main positions have been defined without any tolerances for slope and rotation. For some stick electrodes, it may be useful to add the required tolerances as necessary for their application. In such cases, the main position, e.g. flat position, can be supplemented by specifying limits of slope and rotation.

This standard provides positions for standard discreet test piece orientation PA, PB, HL045, etc. that have been contained by this standard since its inception.

In this revision, positions are defined for production welding. These positions are flat, vertical, overhead and vertical, and unlike test positions, these positions are contiguous.

The relationship between test positions and production welding positions is specified in other standards such as ISO 9606 or ISO 15614.

© ISO 2005 – All rights reserved

Welding — Definitions of testing positions and production welding positions — Complementary element

1 Scope

This Standard defines testing positions for butt and fillet welds and production welding positions for butt and fillet welds.

Annex A provides information limits of the slope of a weld axis and the rotation of the weld face about the weld axis for production welding positions

NOTE Butt weld and groove weld are synonymous.

2 Terms and definitions

For the purposes of this document, the following terms and definitions apply.

2.1
Testing position
a standard position that a test piece is place in during welding of a test piece. Test piece welds may be groove or fillet welds.

2.2
Welding position
The position of a production weld in space relative to the horizontal plane. Welding positions are defined relative to the inclination of the weld axis and rotation of the face of the weld relative to the horizontal plane.

2.3
slope, *S*
in the case of straight welds, the angle between the root line and the positive x-axis of the horizontal reference plane (see Figure 1); the slope is measured in the mathematically positive (i.e. counter-clockwise) direction the co-ordinate system shall be arranged so that the root line lies in the vertical reference plane (x/z-plane; see Figure 1) and that the working direction radiates outwards from the co-ordinate origin.

In the case of curved welds, the same stipulation applies: the slope is obtained from the tangent to the root line — at the particular cross-section of the weld in question — and the x-axis.

Each particular cross-section has its own specific co-ordinate system.

NOTE For pipes with inclined axes, the slope is intrinsically expressed by the welding direction (see 3.2).

2.4
rotation, *R*
the angle between the centreline of the weld (i.e. the line joining the centres of the weld root and the capping layer) and the positive y-axis or a line parallel to the y-axis, measured in the mathematically positive (i.e. counter-clockwise) direction in the plane of the transverse cross-section of the weld in question

© ISO 2005 – All rights reserved

the viewing direction for the weld cross-section is directed towards the co-ordinate origin, i.e. opposite to the working direction (see Figure 2) in the case of slopes where S = 90° or S = 270° (see Figure 1), it is not necessary to determine the rotation because all angles may occur. Examples of how rotation is determined on symmetrical and asymmetrical butt and fillet welds are given in Figure 3 to Figure 5

NOTE 1 The centreline usually coincides with the position of the filler material, e.g. covered electrode.

NOTE 2 For pipes with inclined axes, the rotation is intrinsically expressed by the angle of inclination (see 3.3).

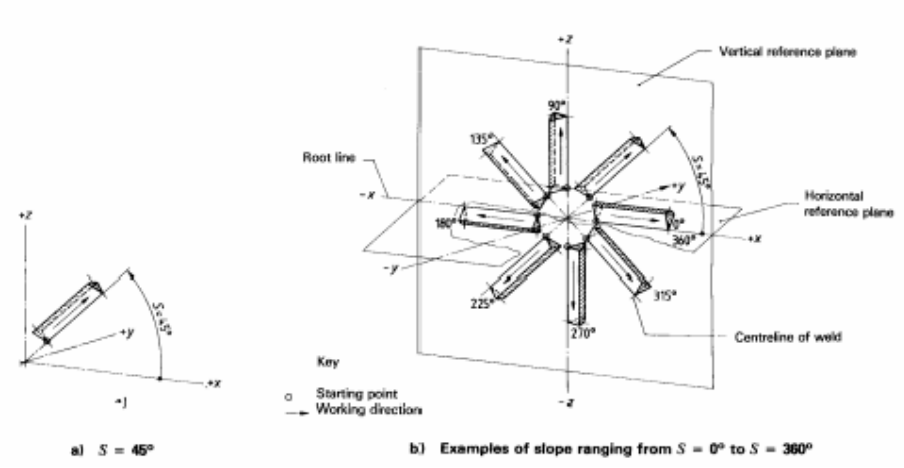

a) S = 45° b) Examples of slope ranging from S = 0° to S = 360°

Figure 1 — Slope, *S*

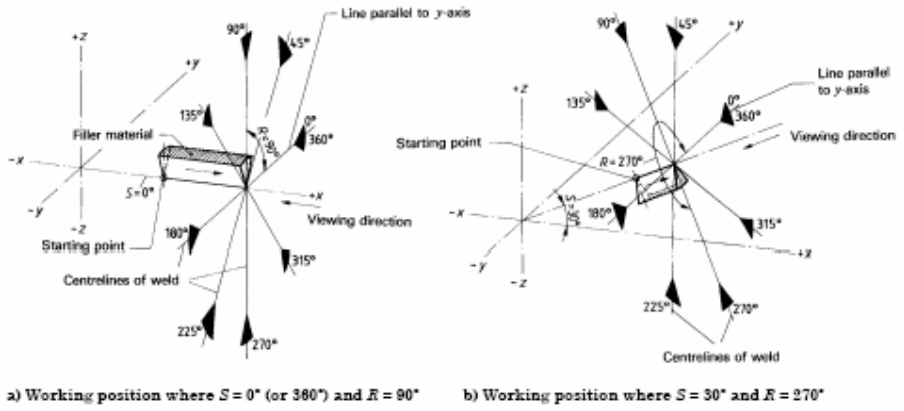

a) Working position where S = 0° (or 360°) and R = 90° b) Working position where S = 30° and R = 270°

Figure 2 — Rotation, *R*

© ISO 2005 – All rights reserved

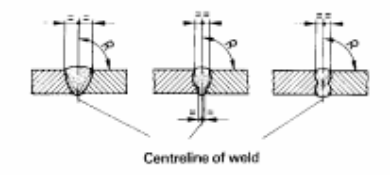

Figure 3 — Examples of rotation (*R* = 90°) of symmetrical butt welds with horizontal workpiece surface

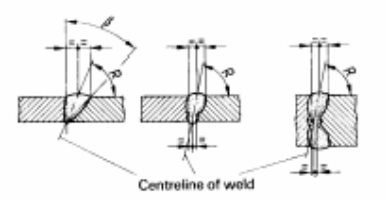

Figure 4 — Examples of rotation, *R*, of asymmetrical butt welds with horizontal workpiece surface

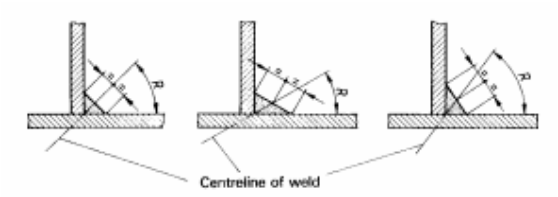

Figure 5 — Examples of rotation, *R*, of symmetrical and asymmetrical fillet welds

3 Working positions

3.1 Testing positions

Testing positions, defined by slope and rotation, are given in Table 1 and illustrated in Figure 6. For the sake of clarity, symbols for the main working positions are given from the co-ordinate origin; the working direction is outwards.

Examples of testing positions for butt and fillet welds are illustrated in Figure 7.

© ISO 2005 – All rights reserved

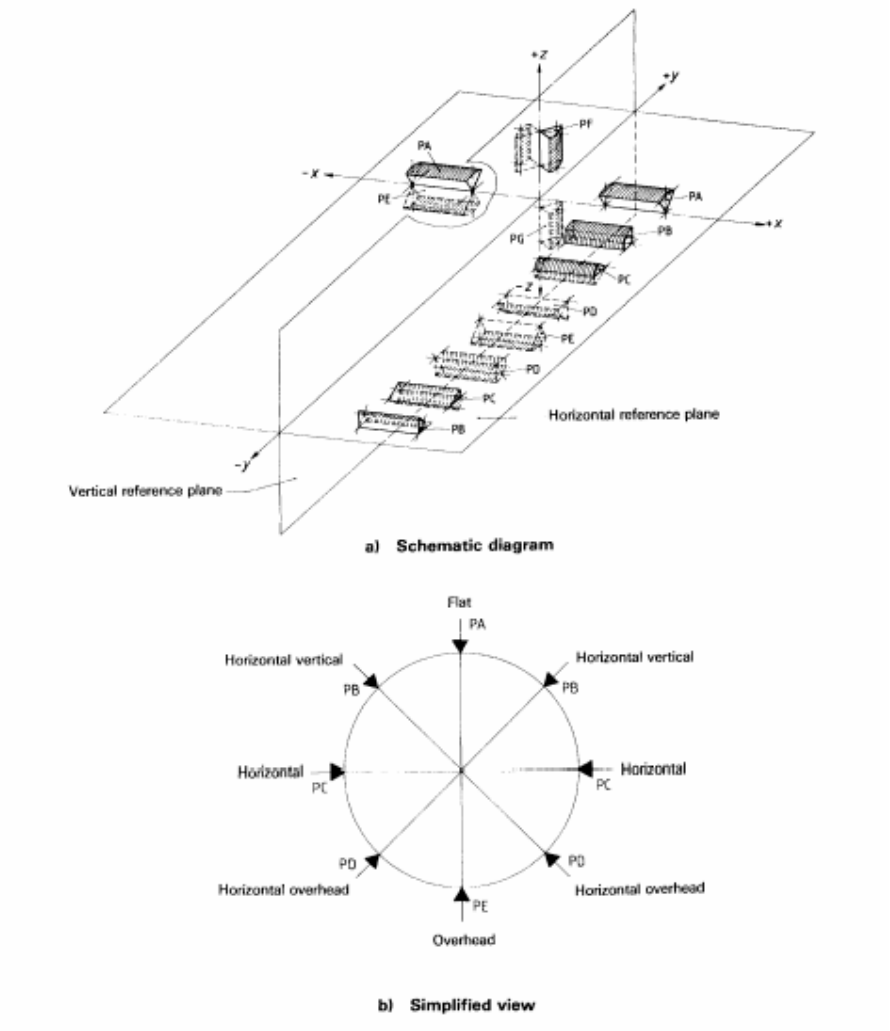

Figure 6 — Main positions

© ISO 2005 – All rights reserved

Table 1 — Terms and symbols for main positions

Terms	Description	Symbol	Slope, *S*	Rotation, R
Flat position	Horizontal working, centreline of weld vertical, capping layer on capping	PA	0° 180°	90° 90°
Horizontal vertical position	Horizontal working, capping layer towards the capping	PB	0° 0° 180° 180°	45° 135° 35° 135°
Horizontal position	Horizontal working, centreline of weld horizontal	PC	0° 0° 180° 180°	0° 180° 0° 180°
Horizontal overhead position	Horizontal working, overhead, capping layer towards the bottom	PD	0° 0° 180° 180°	225° 315° 225° 315°
Overhead position	Horizontal working, overhead, centreline of weld vertical, capping layer underneath	PE	0° 180°	270° 270°
Vertical up position	Working upwards	PF	90°	-
Vertical down position	Working downwards	PG	270°	-

NOTE To avoid confusion with existing abbreviations, e.g. F for flat, in principle the letter “P” (for position) has been placed in front of the symbol to indicate “main position”.

NOTE Tolerances for the main positions are not specified in this International Standard because they depend on the different welding procedures used.

© ISO 2005 – All rights reserved

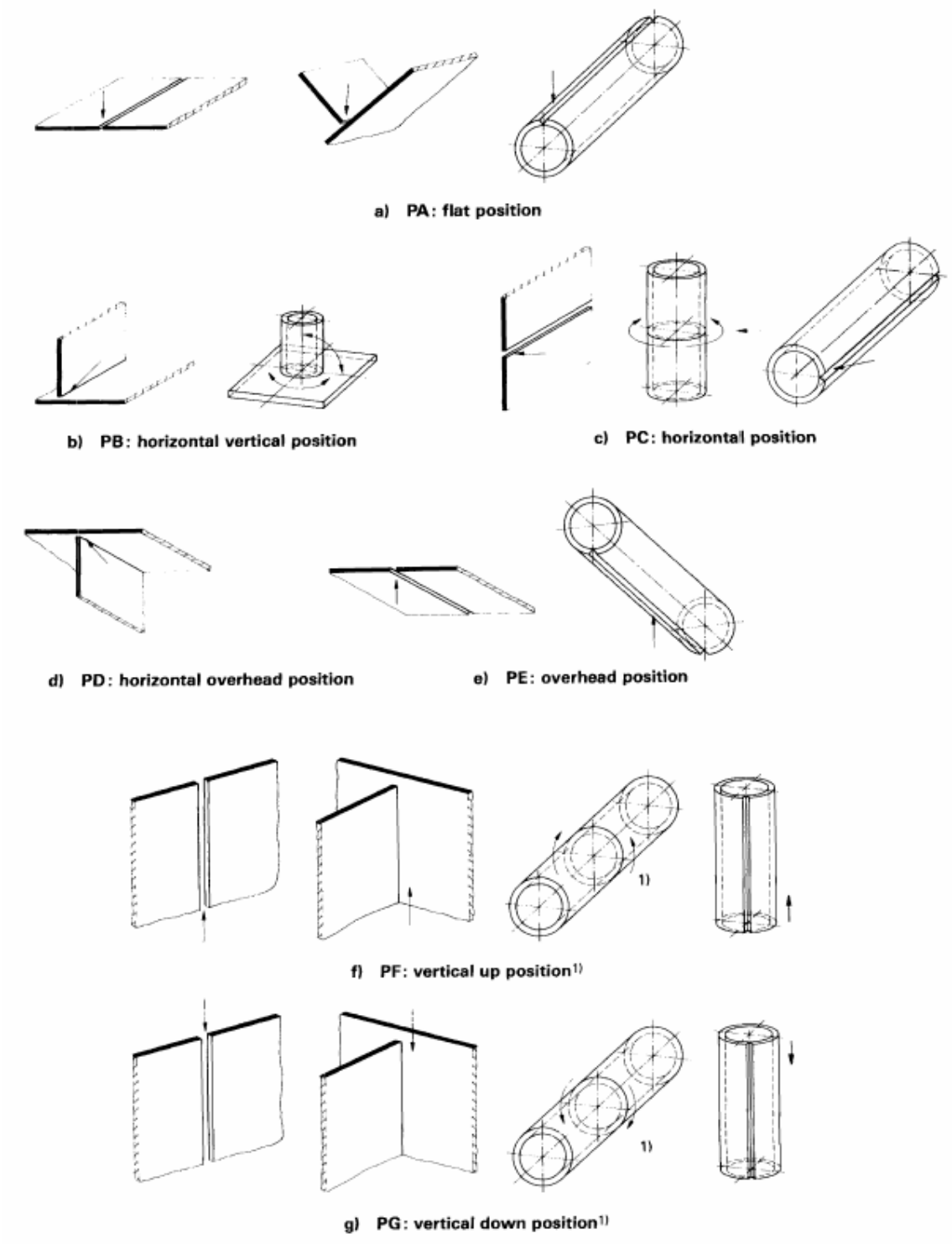

1) For special purposes, e.g. testing welders; this position is regarded as a main position.

Figure 7 — Examples of main positions for butt and fillet welds

© ISO 2005 – All rights reserved

3.2 Production welding positions

Tables 2 and 3 and figures 8 and 9 define production welding positions in terms of the slope of the weld axis relative to the horizontal plane and the rotation of the weld face about the weld axis also relative to the horizontal plane.

Separate figures are provided for groove weld orientation and for fillet weld orientation.

The relationship between test positions described in previous paragraphs and the following figures is specified in other standards such as ISO 9606 or ISO 15614.

4 Designation

Main positions shall be designated by the appropriate symbol specified in Table 1 (see example 1); the symbol for the main position may be supplemented by the values for slope and rotation, given in three digits (see example 2).

Inclined positions shall be designated by slope and rotation in accordance with 3.2.1, except for pipes with inclined axes (see example 3).

For circumferential welds in pipes with inclined axes, the indication of slope and rotation shall be simplified in accordance with 3.2.2 (see examples 4 and 5).

Examples: plates

1) The main position “horizontal vertical” (PB) shall be designated as follows:

PB

2) The main position “horizontal vertical” (PB), with slope of 130° and rotation of 45°, shall be designated as follows:

PB 130-045

3) The inclined position, with slope of 30° and rotation of 90°, shall be designated as follows:

030-090

Examples: pipes

4) The weld position on pipes with inclined axes, with welding direction “welding up” (H) and an inclination angle of 30°, shall be designated as follows:

H-L030

5) The weld position on pipes with inclined axes, with welding direction “welding down” (J) and an inclination angle of 60°, shall be designated as follows:

J-L060

© ISO 2005 – All rights reserved

Table 2 — Production welding positions for butt welds

Position	Reference in Figure 8	Inclination of axis, °	Rotation of face, °
Flat	A	0° to 15 °	150° to 210 °
Horizontal	B	0° to 15 °	80° to 150° 210° to 280°
Overhead	C	0° to 80°	0° to 80° 280° to 360°
Vertical	D E	15° to 80° 80° to 90°	80° to 280° 0° to 360°

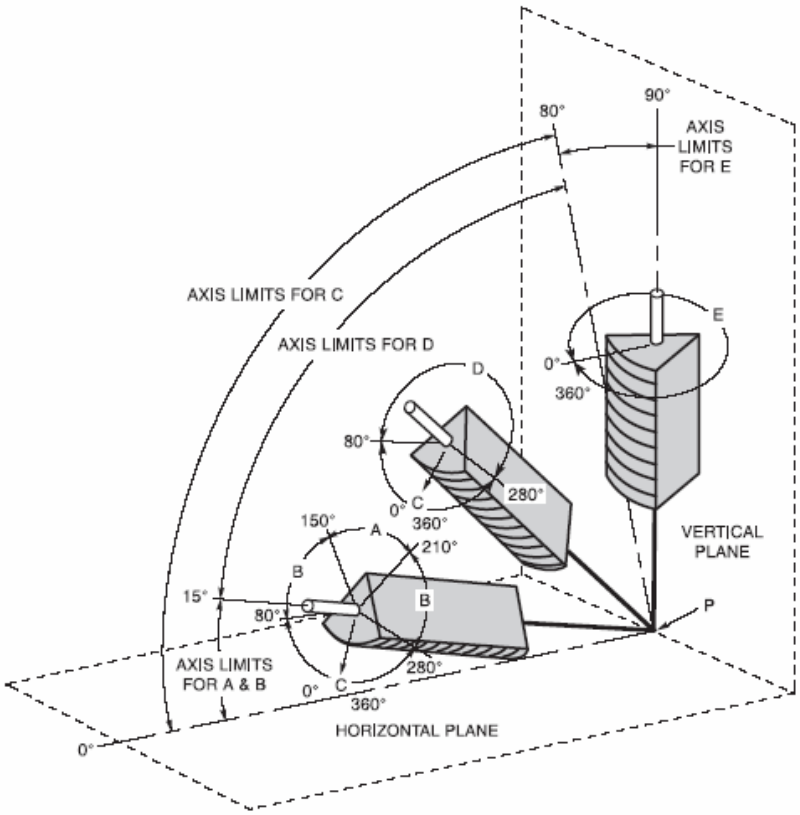

NOTE 1 The horizontal reference plane is always taken to lie below the weld under consideration.

NOTE 2 The indication of the weld axis is measured from the horizontal reference plane toward the vertical reference plane

NOTE 3 The angle of rotation of the weld face is determined by a line perpendicular to the weld face at its centre which passes through the weld axis. The reference position (0°) of rotation of the weld face invariably points in the direction opposite to that in which the axis angle increases. When looking at point P, the angle of rotation of the weld face is measured in a clockwise direction from the reference position (0°).

Figure 8 — Production welding positions for butt welds

© ISO 2005 – All rights reserved

Table 3 — Production welding positions for filet welds

Position	Reference in Figure 9	Inclination of axis, °	Rotation of face, °
Flat	A	0° to 15 °	150° to 210 °
Horizontal	B	0° to 15 °	125° to 150° 210° to 235°
Overhead	C	0° to 80°	0° to 125° 235° to 360°
Vertical	D E	15° to 80° 80° to 90°	125° to 235° 0° to 360°

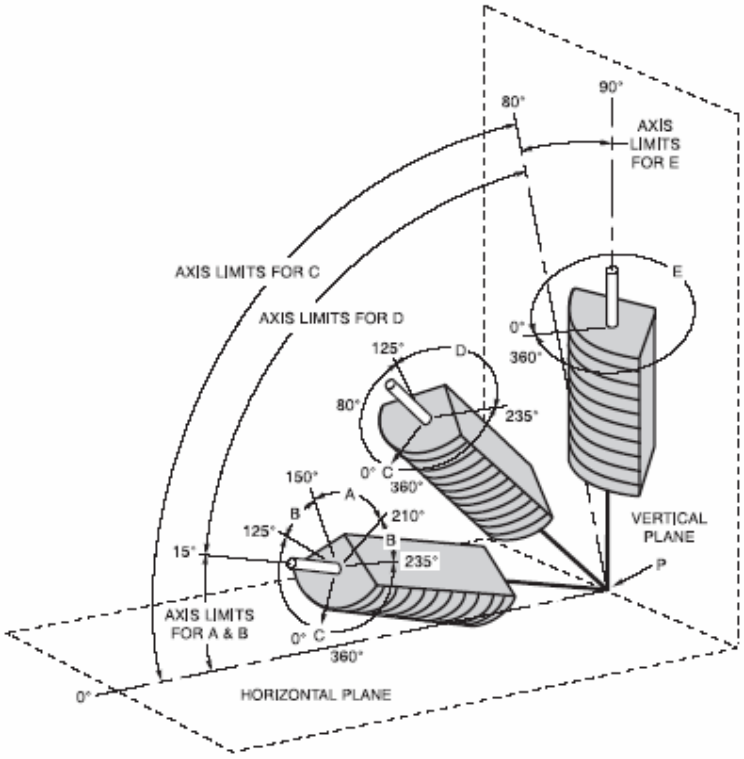

NOTE 1 The horizontal reference plane is always taken to lie below the weld under consideration.

NOTE 2 The indication of the weld axis is measured from the horizontal reference plane toward the vertical reference plane

NOTE 3 The angle of rotation of the weld face is determined by a line perpendicular to the weld face at its centre which passes through the weld axis. The reference position (0°) of rotation of the weld face invariably points in the direction opposite to that in which the axis angle increases. When looking at point P, the angle of rotation of the weld face is measured in a clockwise direction from the reference position (0°).

Figure 9 — Production welding positions for fillet welds

© ISO 2005 – All rights reserved

Annex A
(informative)

Limits of the slope of a weld axis and the rotation of the weld face about the weld axis for production welding positions

Production welding positions are Flat, Vertical, Overhead and Horizontal. This Annex describes with a series of sketches the limits of the slope of a weld axis and the rotation of the weld face about the weld axis for production welding positions. These sketches are based on figures 8 and 9.

These welding positions are used in other standards to define the orientation of welds in production welding after qualifying in one of the standard test positions PA, PB, HL045, etc. or other testing position defined by those other standards.

Figures A.1 to A.20 show sketches for butt welds and figures A.21 to A.29 show sketches for fillet welds.

Fillet welds positions are defined by the slope of the weld axis and the rotation of the weld face in a manner similar to positions for butt welds.

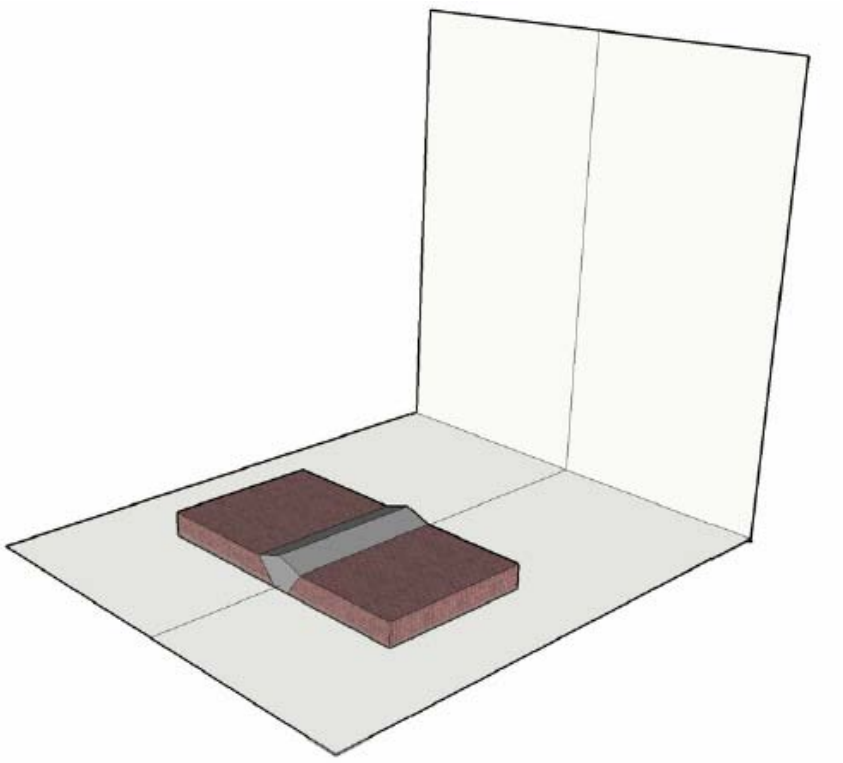

Figure A.1 — Basic flat position

© ISO 2005 – All rights reserved

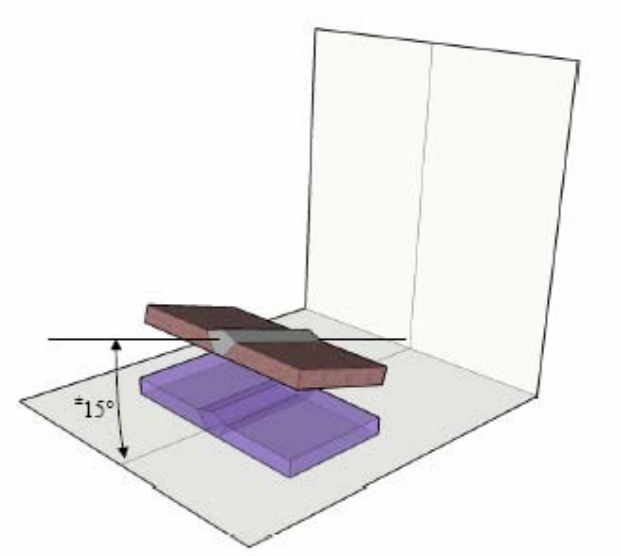

Figure A.2 — Flat position axis slope limits ±15°

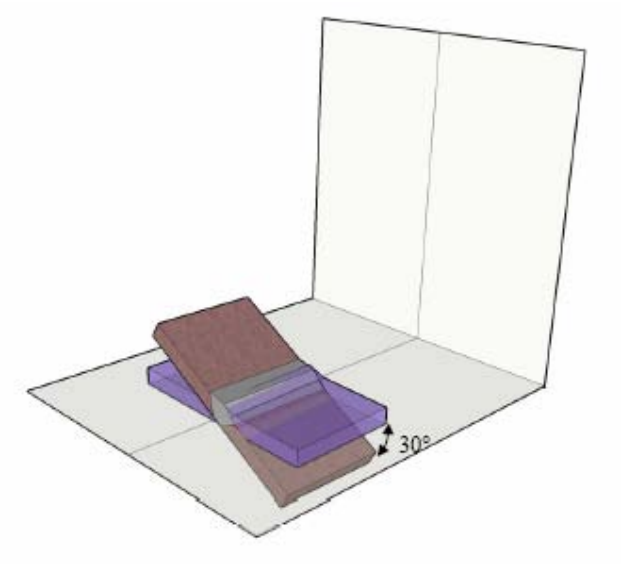

Figure A.3 — Flat position rotation about weld axis limits ±30°

© ISO 2005 – All rights reserved

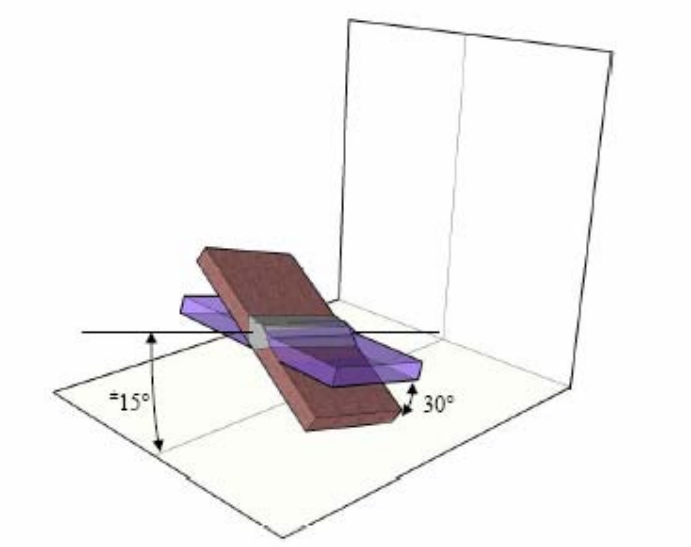

Figure A.4 — Flat position combined axis slope and face rotation limits

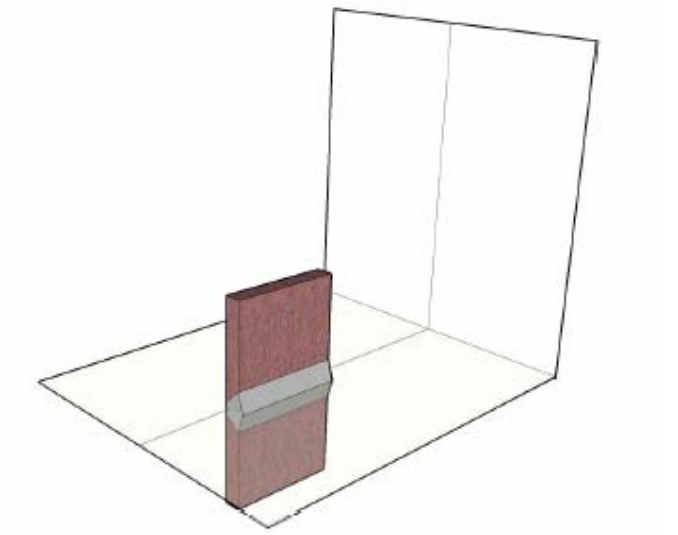

Figure A.5 — Basic horizontal position

© ISO 2005 – All rights reserved

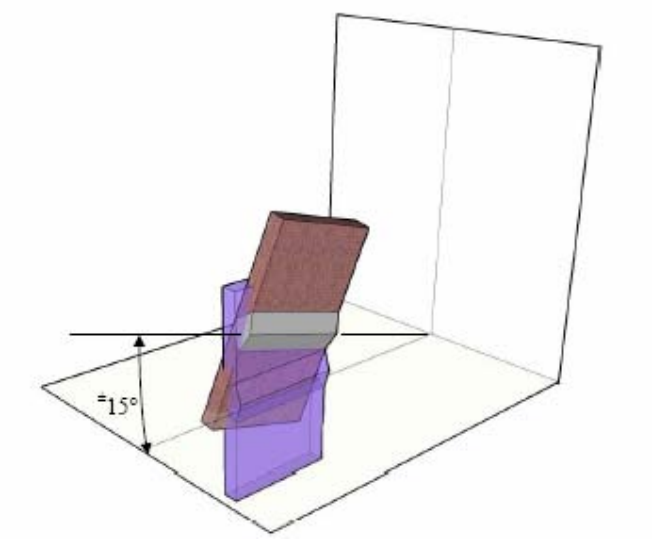

Figure A.6 — Horizontal position weld axis slope limits ±15°

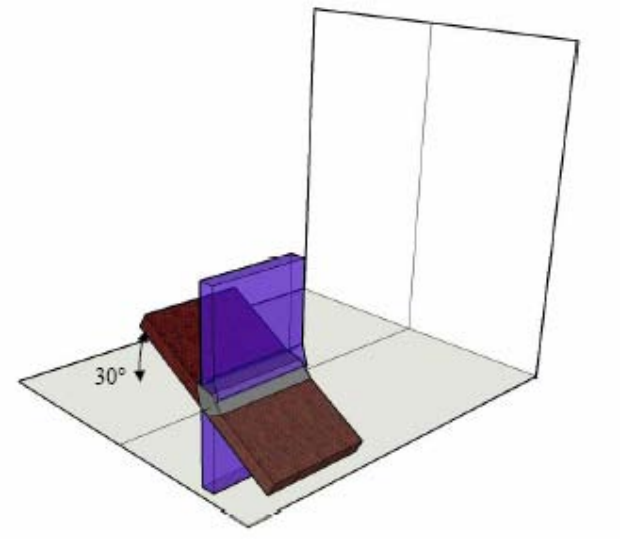

Figure A.7 — Horizontal position weld face rotation starts at 30° of face rotation from the horizontal plane

© ISO 2005 – All rights reserved

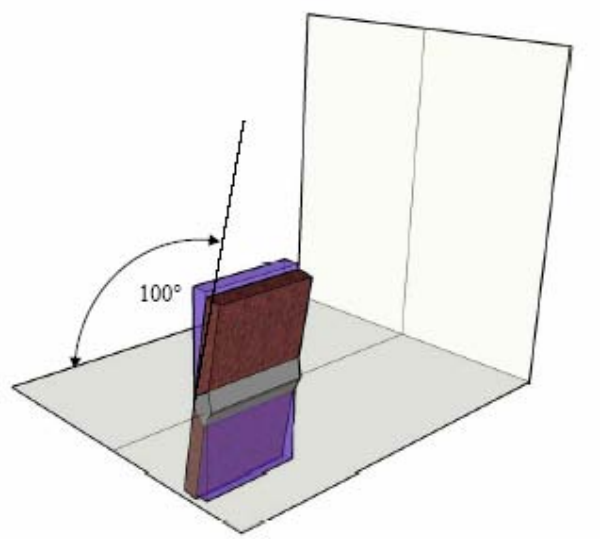

Figure A.8 — Horizontal position weld face rotation ends at 100° face rotation from the horizontal plane

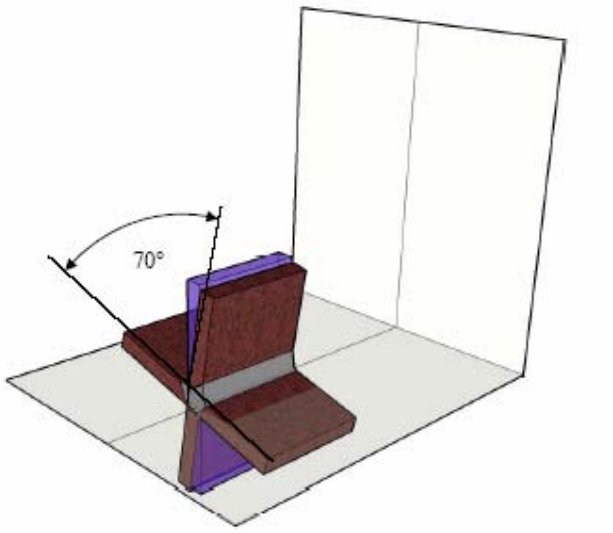

Figure A.9 — Horizontal position range of weld face rotation is 70°

© ISO 2005 – All rights reserved

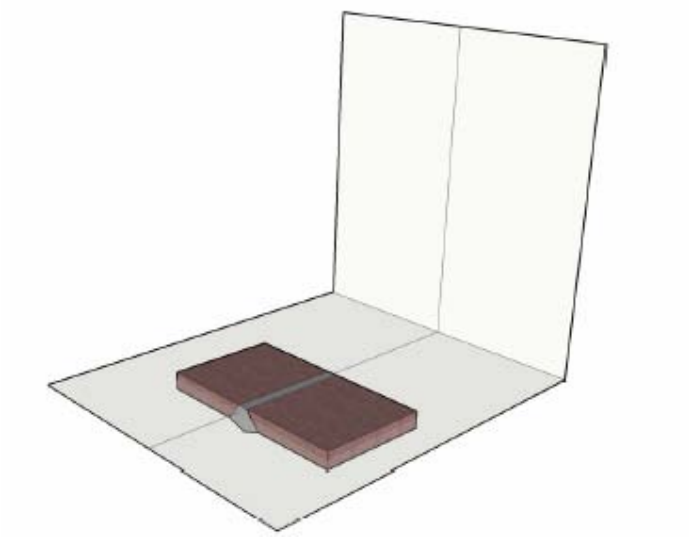

Figure A.10 — Basic overhead position (face of weld is down)

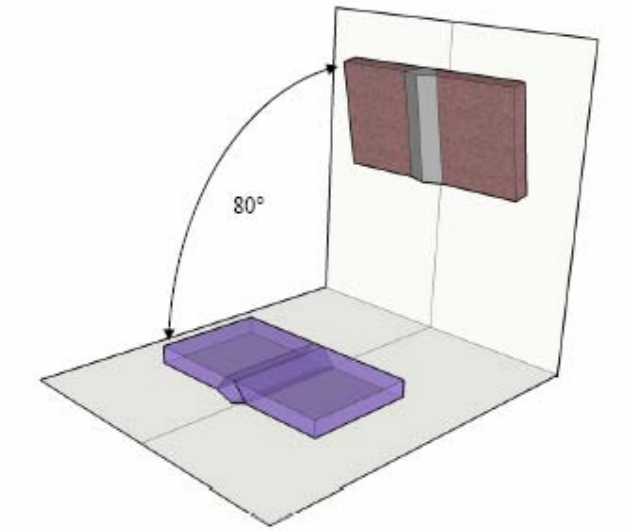

Figure A.11 — Overhead position weld axis slope limit

© ISO 2005 – All rights reserved

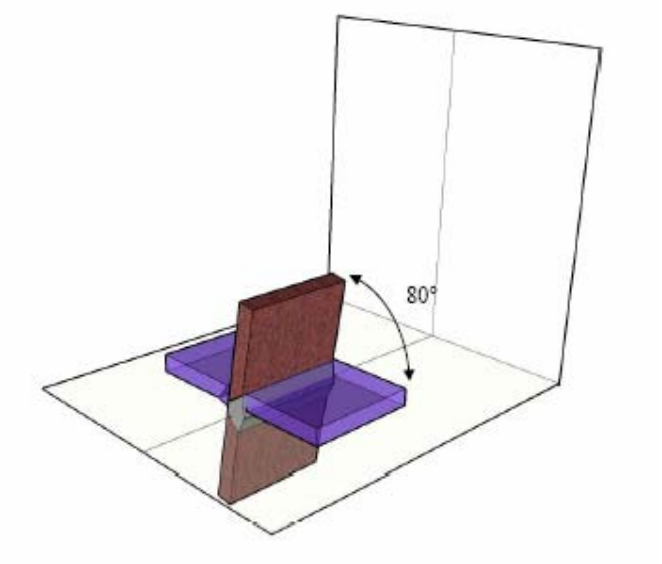

Figure A.12 — Overhead position weld face rotation limit

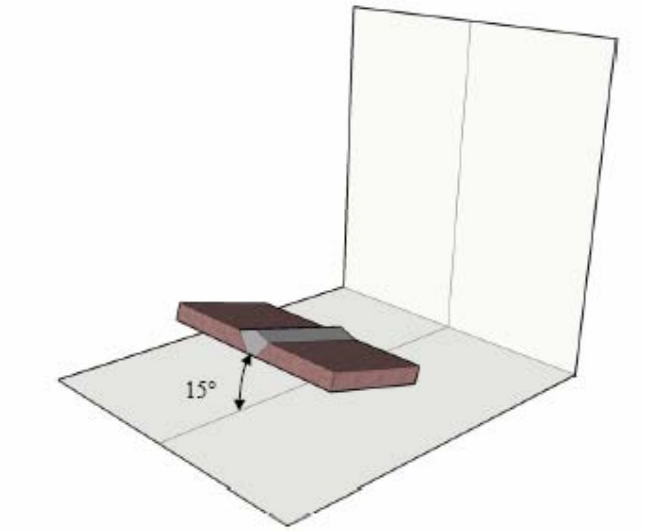

Figure A.13 — Basic vertical position – Part 1 (face of weld is up - starts where flat position ends)

© ISO 2005 – All rights reserved

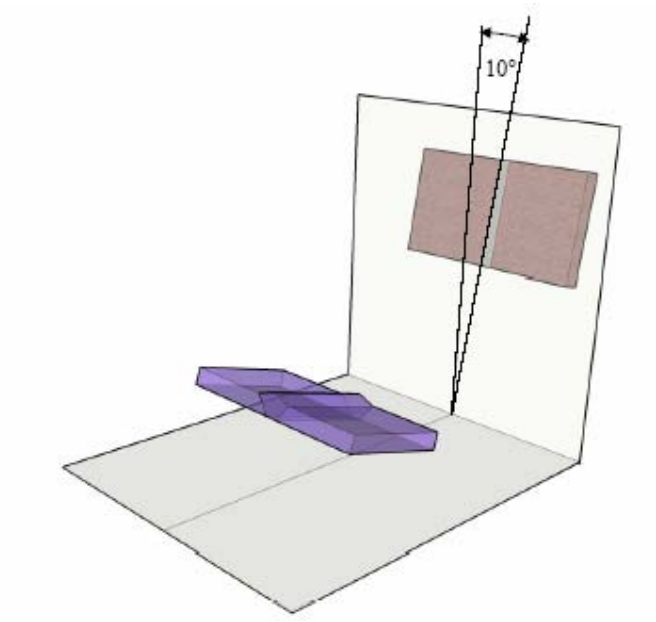

Figure A.14 — Basic vertical position – Part 1 (limit of slope of weld axis)

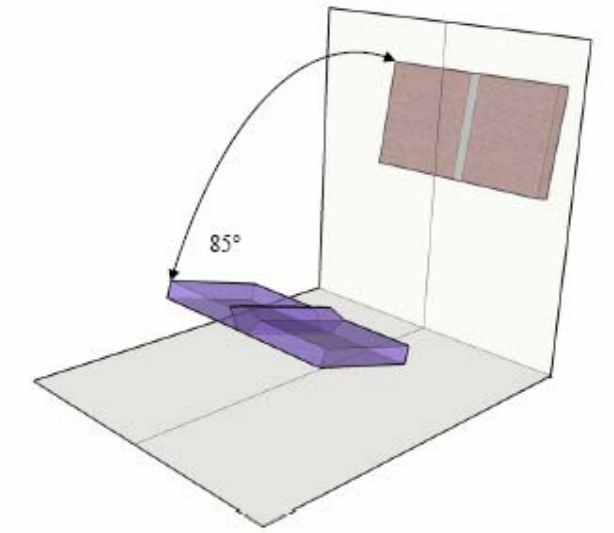

Figure A.15 — Basic vertical position – Part 1 (range of slope of weld axis)

© ISO 2005 – All rights reserved

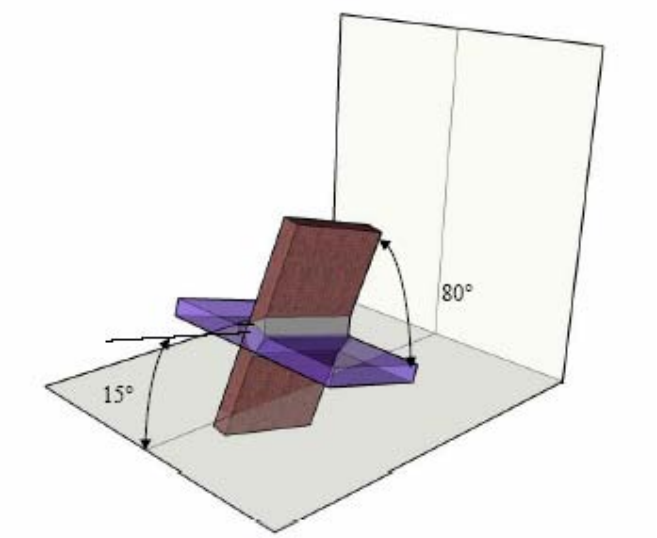

Figure A.16 — Basic vertical position – Part 1 (limit of rotation about weld axis at lower slope limit)

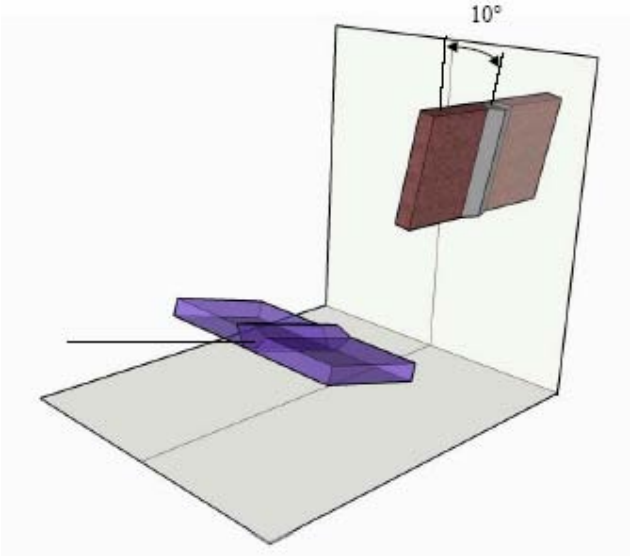

Figure A.17 — Basic vertical position – Part 1 (limit of rotation about weld axis at upper slope limit)

© ISO 2005 – All rights reserved

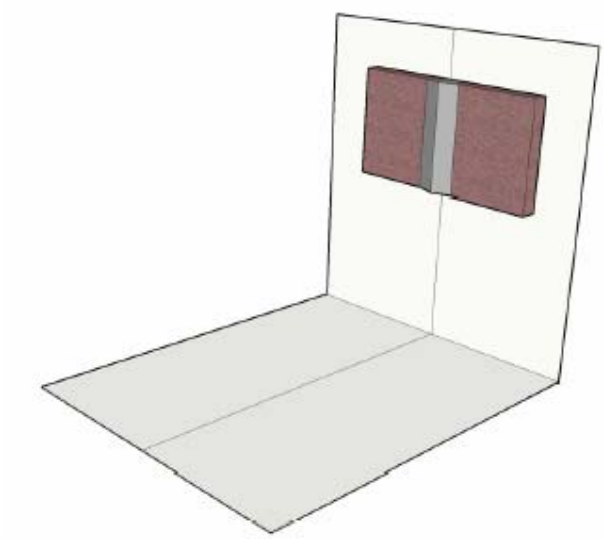

Figure A.18 — Basic vertical position – Part 2

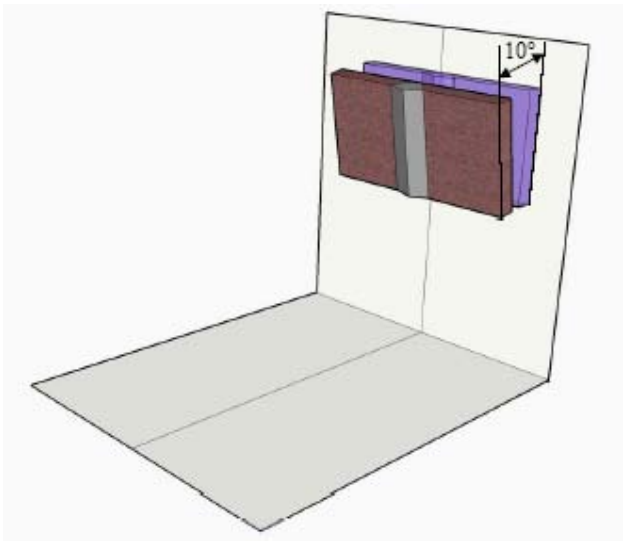

Figure A.19 — Basic vertical position – Part 2 (limit of slope of weld axis towards overhead)

© ISO 2005 – All rights reserved

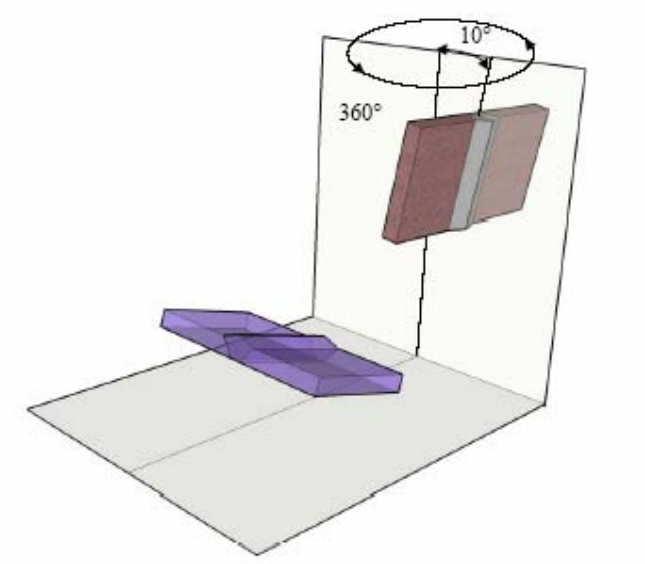

Figure A.20 — Basic vertical position – Part 2 (360° of rotation about the vertical axis at slope limit)

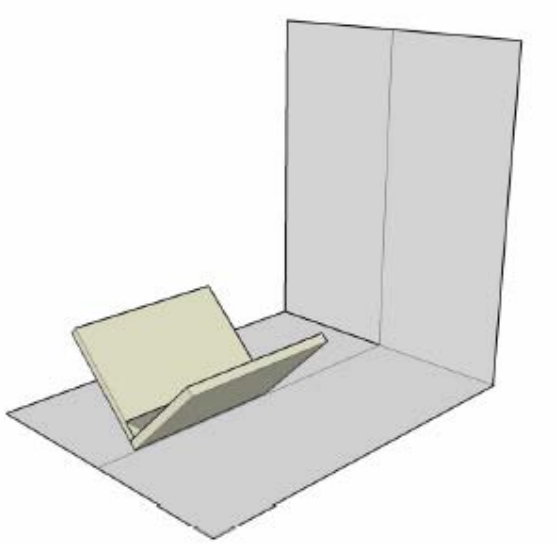

Figure A.21 — Basic flat fillet weld

© ISO 2005 – All rights reserved

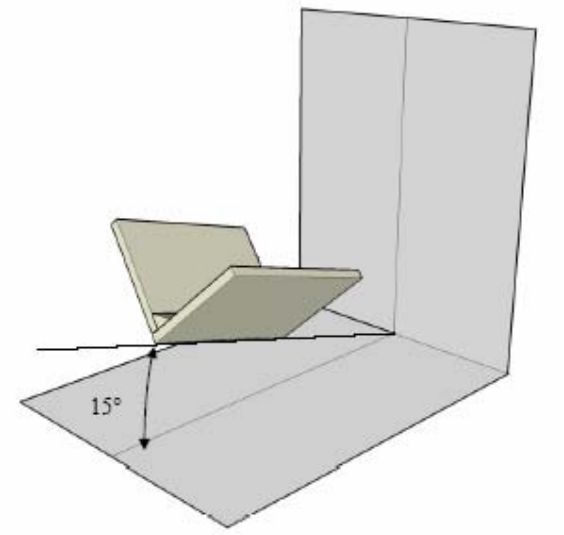

Figure A.22 — Flat position slope axis limit

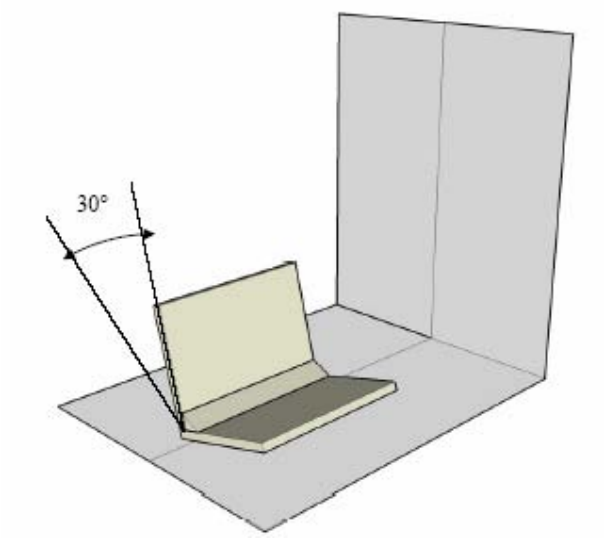

Figure A.23 — End of flat position rotation about weld axis and start of horizontal rotation

© ISO 2005 – All rights reserved

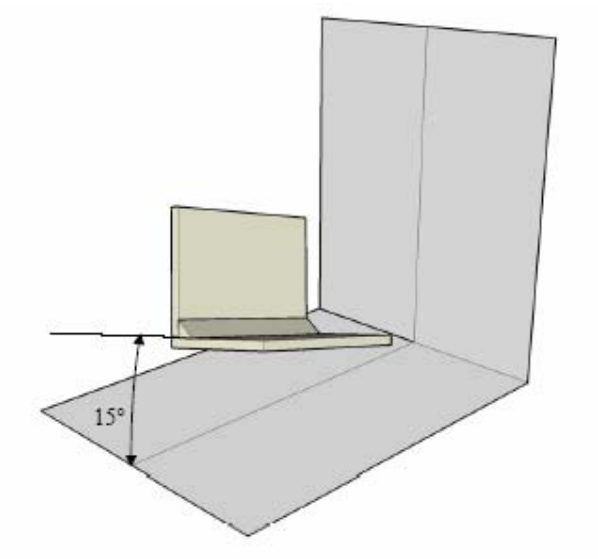

Figure A.24 — Flat position slope axis limit and rotation limit

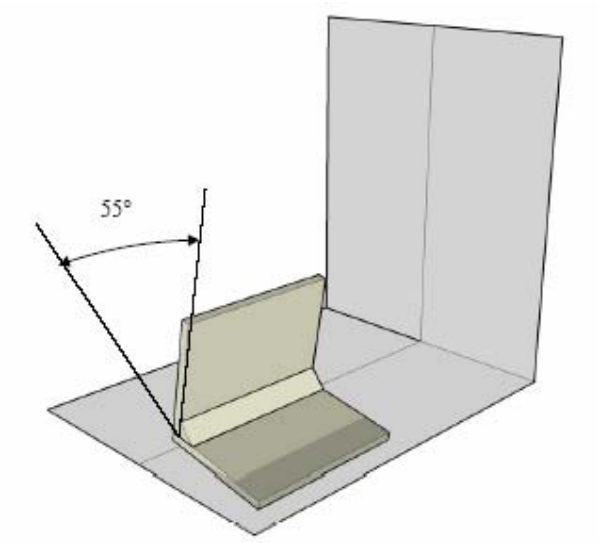

Figure A.25 — Horizontal position rotation limit from basic flat

© ISO 2005 – All rights reserved

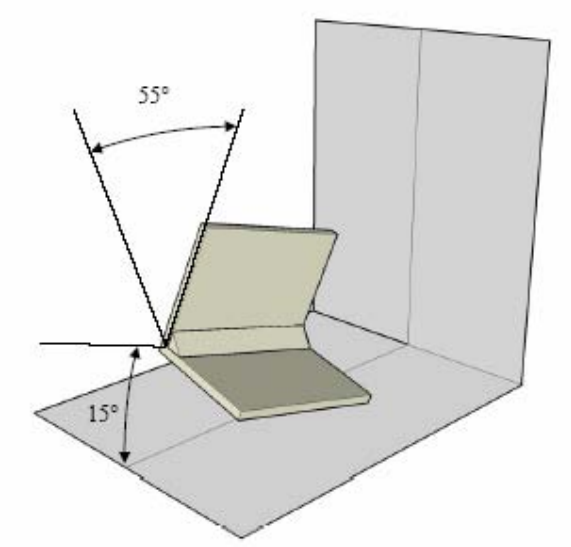

Figure A.26 — Horizontal position slope axis limit and rotation limit; also beginning of overhead position

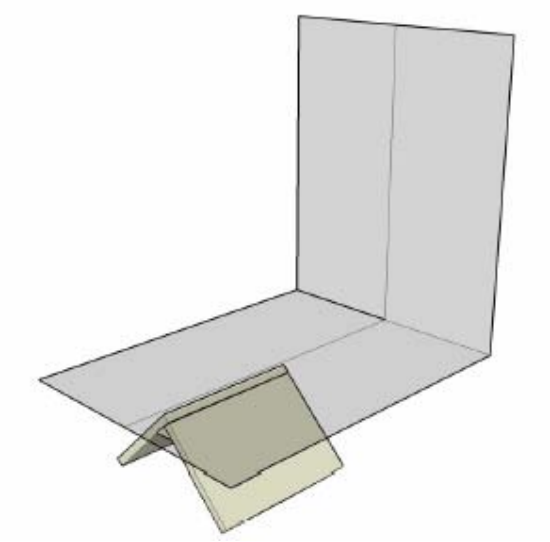

Figure A.27 — Basic overhead position

© ISO 2005 – All rights reserved

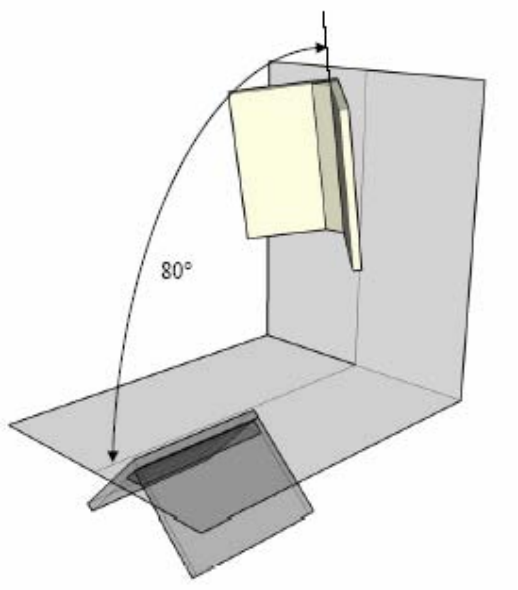

Figure A.28 — Overhead position slope axis limit

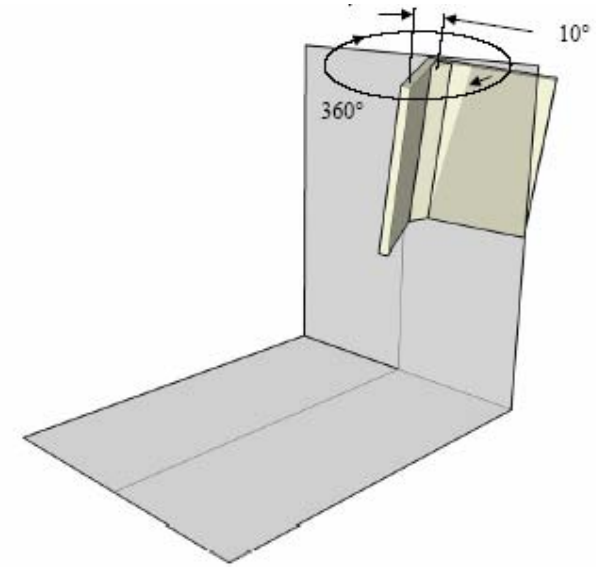

Figure A.29 — Overhead position rotation about vertical axis

© ISO 2005 – All rights reserved