DEUTSCHE NORM **April 2007**

DIN EN 14420-7

ICS 23.040.70

Supersedes
DIN EN 14420-7:2005-05

Hose fittings with clamp units-
Part 7:Cam locking couplings
(includes Amendment A1:2007)
English version of DIN EN 14420-7:2007-04

Schlaucharmaturen mit Klemmfassungen-
Teil 7:Hebelarmkupplungen
(enthält Änderung A1:2007)
Englische Fassung DIN EN 14420-7:2007-04

Document comprises 25 pages

English price group 12
www.din.de
www.beuth.de
07.07 9849425

National foreword

This standard has been prepared by CEN/TC 218 “Rubber and plastics hoses and hose assemblies”(Secretariat:BSI,United Kingdom).

The responsible German body involved in its preparation was the *Normenausschuss Rohrieitungen und Dampfkesselanlagen*(Pipelines and Bolers Standards Committee),Technical Committee NA 082-00-02 AA Schlauchkupplungen

Amendments

This standard differs from DIN EN 14420-7:2005-05 as follows:

a) The scope has been amended.

Previous editions

DIN 2828:1994-02
DIN EN 14420-7:2005-05

EUROPEAN STANDARD
NORME EUROPÉENNE
EUROPÄISCHENORM

EN 14420-7:2004+A1

january 2007

ICS 23.040.70

Supersedes EN 14420-7:2004

English Version

Hose fittings with clamp units-part 7:Cam locking couplings

Raccords pour flexibles avec demi-coquille-Partie 7: Raccords à cames

Schlaucharmaturen mit Klemmfassungen-Teil 7: Hebelarmkupplungen

This European Standard was approved by CEN on 30 September 2004 and includes Amendment 1 approved by CEN on 13 December 2006.
CEN members are bound to comply with the CEN/CENELEC intermal Regulations which stipulate the conditions for giving this European Standard the status of a national standard without any alteration Up-to-date lists and bibliographical references comcerning such national standards may be obtained on application to the CEN Management Centre or to any CEN member.
This European Standard exists in three official versions(English,French,German).A version in any other language made by translation under the responsibility of a CEN member into its own language and notifled to the CEN Management Centre has the same status as the official versions.
CEN members are the mational standards bodles of Austria,Belgium, Bulgaria,Cyprus,Czech Republic,Denmard,Estonia,Finland,France,Germany,Greece,Hungary,Iceland,Ireland,Italy,Latvia,Lithuania,Luxembourg,Malta,Netherlands,Norway,Poland,Portugal,Romania,Slovakla,Slovenia,Spain, Sweden,Switzerland and United Kingdom.

EUROPEAN COMMITTEE FOR STANDARDIZATION
COMITÉ EUROPÉEN DE NORMALISATION
EUROPÄISCHES KOMITEE FÜR NORMUNG

Management Centre rue de Stassart,36 B-1050 Brussels

Ref,No.EN 14420-7:2004+A1:2007:E

Contents

Foreword

This document (EN 14420-7:2004+A1:2007) has been prepared by Technical Committee CEN/TC 218 “Rubber and plastics hoses and hose assemblies”,the secretariat of which is held by BSI.

This European Standard shall be given the status of a national standard,either by publication of an identical text or by endorsement,at the latest by July 2007,and conflicting national standards shall be withdrawn at the latest by July 2007.

This document includes Amendment 1,approved by CEN on 2006-12-13.

The start and finish of text introduced or altered by amendment is indicated in the text by tags A1⟩ ⟨A1

EN 14420 consists at the time of publication of the following parts:
EN 14420-1,*Hose fittings with clamp units-Part 1:Requirements,survey,designation and testing*
EN 14420-2,*Hose fittings with clamp units-Part 2:Hose side parts of hose tail*
EN 14420-3,*Hose fittings with clamp units-Part 3:Clamp units,bolted or pinned*
EN 14420-4,*Hose fittings with clamp units-Part 4:Flange connections*
EN 14420-5,*Hose fittings with clamp units-Part 5:Threaded connections*
EN 14420-6,*Hose fittings with clamp units-Part 6:TW tank truck couplings*
EN 14420-7,*Hose fittings with clamp units-Part 7:Cam locking couplings*
EN 14420-8,*Hose fittings with clamp units-Part 8:Symmetrical half coupling (Guillemin system)*

According to the CEN/CENELEC Internal Regulations,the national standards organizations of the following countries are bound to implement this European Standard: Austria,Belgium, Bulgaria,Cyprus,Czech ,Republic,Denmard,Estonia,Finland,France,Germany,Greece,Hungary,Icelan -d,Ireland,Italy,Latvia,Lithuania,Luxembourg,Malta,Netherlands,Norway,Poland,Portugal,Romania, Slovakla,Slovenia,Spain, Sweden,Switzerland and United Kingdom.

Introduction

Cam locking couplings are manufactured worldwide according to the American”military specification”MIL-C-27487.This American standard fixes only the coupling side,but not the connection side.Other parts like levers,bolts,ring and seals are not standardized.

1 Scope

This document details the design,materials and dimensions for cam locking couplings that serve as the link between hoses and connections to transport liquids,solids and gases,except liquid gas and steam.The couplings are capable of operating the pressure range -0.8 bar to A1 16 A1 bar wording pressure in a wording temperature range of -20℃ up to +65℃.

WARNING—Line pressure shall be reduced before disconnection.

2 Normative references

The following referenced documents are indispensable for the application of this document.For dated references,only the edition cited applies.For undated references,the latest edition of the referenced document (including any amendments) applies.

EN 1982,*Copper and copper alloys—Ingots and castings*

EN 10083-2,*Quenched and tempered steel—Part 1:Technical delivery conditions for unalloyed quality steess (includes amendment A1:1996)*

EN 10088-1,*Stainless steels—Part 1:List of stainless steesls*

EN 10213-4,*Technical delivery conditions for steel castings for pressure purposes —Part 4:Austenitic and austenitic-ferritic steel grades*

EN 10226-1,*Pipe threads where pressure tight joints are made on the threads—Part 1:Taper external threads and parallel internal threads – Dinensions,tolerances and designation*

EN 12420,Copper and copper alloys—Forgings

EN 14420-1,*Hose fittings with clamp units-Part 1:Requirements,survey,designation and testing*

EN 14420-2,*Hose fittings with clamp units-Part 2:Hose side parts of hose tail*

EN 14420-5,*Hose fittings with clamp units-Part 5:Threaded connections*

EN ISO 228-1,*Pipe threads where pressure-tight joints are not made on the threads–Part 1: Dimensions,tolerances and designation (ISO 228-1:2000)*

ISO 48,*Rubber,vulcanized or thermoplastic–Determination of hardness (hardness between 10 IRHD and 100 IRHD)*

ISO 272,*Fasteners–Hexagon products–Widths across flats*

EN 22768-1,*General tolerances–Part 1:Tolerances for linear and angular dimensions without individual tolerance indications*

EN 22768-2,*General tolerances–Part 2:Geometrical tolerances for fiatures without individual tolerance indications*

3 Requirements

3.1 Construction

The curves of the lever and the adapters as well as the dimensions of the sealing ring shall be harmonized such that twisting of the hose and vibrating during operation shall not lead to leakage.Self-acting uncoupling shall be excluded

Cam arms shall be suitable to operate without using tools.
For gauges for cam-locking coupings according to this standard see Annex A.

NOTE If the requirements of this standard are met,compatibility between couplers and adapters from different manufacturers is assured.Apart from gaskets the interchangeability between spare parts from different manufacturers cannot be assured.

3.2 Temperatures

Range of wording temperatures of couplings equipped with NBR rubber gasket: -20℃ to +65℃.Out of these limits the manufacturer shall be consulted.

4 Survey

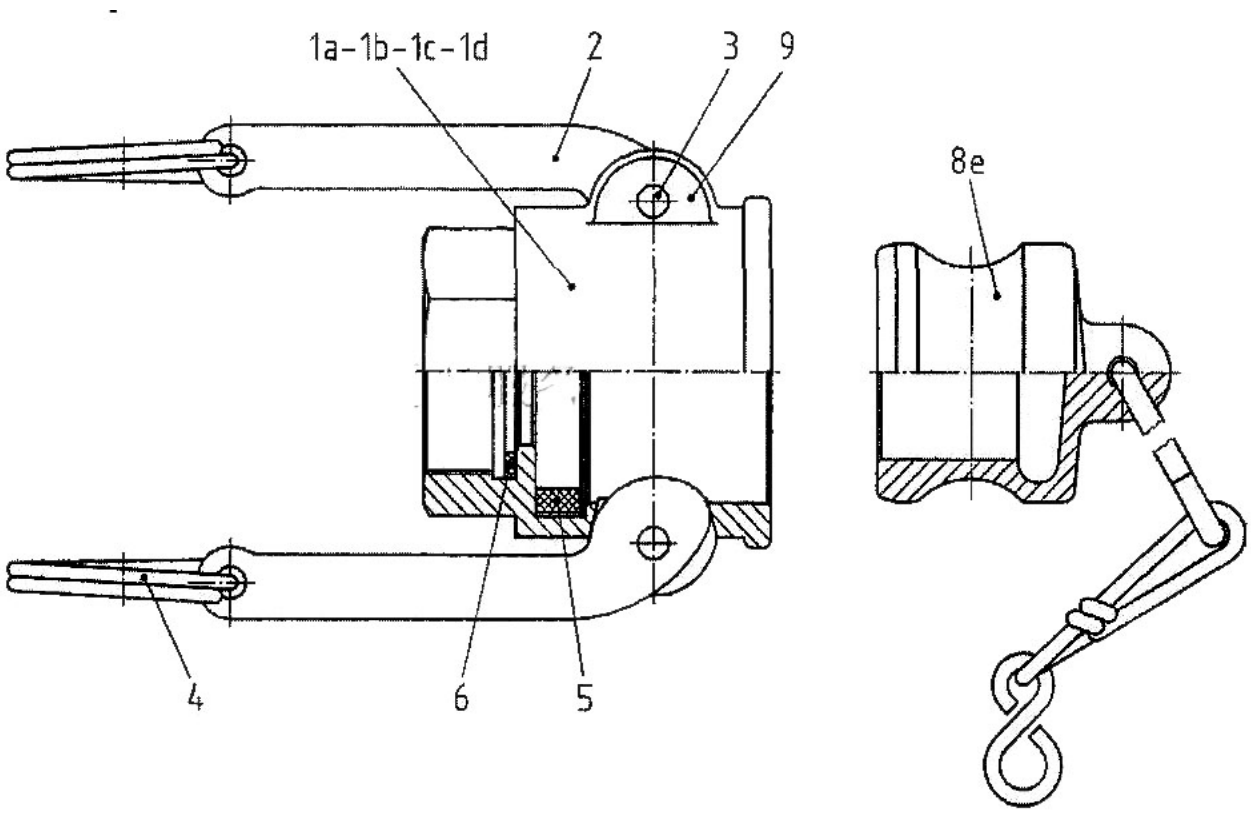

Key

See Table 1

NOTE Chain optional

Figure 1—Coupler type DF and adapter type DP (dust plug)

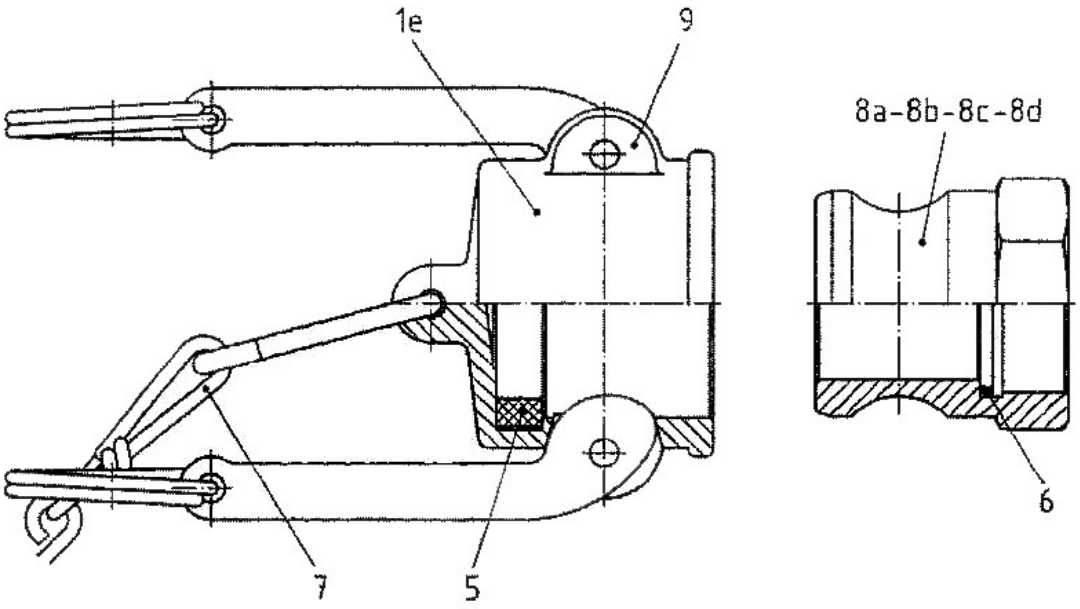

Key

See Table 1

NOTE Chain optional

Figure 2—Coupler type DC and adapter type AF

Table 1—Survey

Item No.	Number of pieces	Nomination		
1a	1	body	with internal thread	for coupler
1b	1		with external thread	
1c	1		with welding connection	
1d	1		with hose nipple	
1e	1		cap	
2	2	cam arms		
3	2	pin		
4	2	ring		
5	1	main gasket		
6	1	thread gasket for internal thread (see EN 14420-5)		
7	1	At the discretion of the manufacturer[a]		
8a	1	Adapter	with internal thread	
8b	1		with external thread	
8c	1		with welding neck	
8d	1		with hose tail	
8e	1		plug	
9	4	ears		
a The chain is not part of a complete coupling.				

5 Types of connection,survey

Table 2—Types of connection,survey

Coupler			Adapter					
Figure	Type	for-detail see	Figure	Type	for-detail see	kind of connection	DN	thread
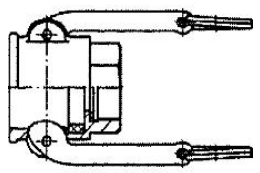	DF	7.2.1	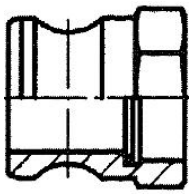	AF	7.8.1	internal thread according to EN ISO 228-1 flat-sealed with sealing ring according to EN 14420-5	20 25 32 40 50 65 80 100	G3/4 G1 G11/4 G11/2 G2 G21/2 G3 G4
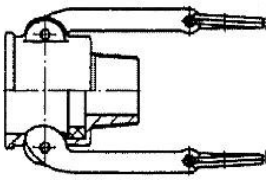	BF[a]	7.2.2	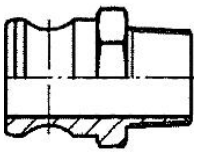	FF[a]	7.8.2	external thread according to EN 10226-1	20 25 32 40 50 65 80 100	R3/4 R1 R11/4 R11/2 R2 R21/2 R3 R4
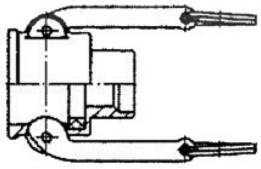	DW	7.2.3	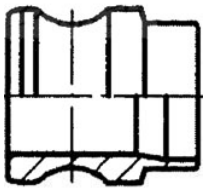	AW	7.8.3	welding connection	20 25 32 40 50 65 80 100	—
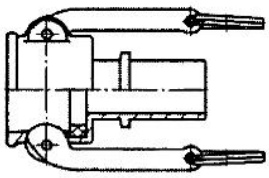	CC	7.2.4	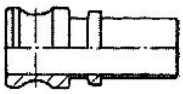	EC	7.8.4	hose tail	20 25 32 40 50 65 80 100	—
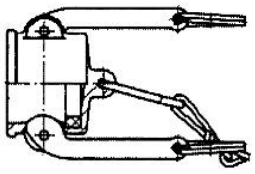	DC	7.2.5	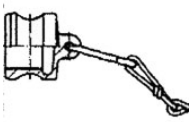	DP	7.8.5	dust cap,dust plug	20 25 32 40 50 65 80 100	—
a Prepared for flat face connections.								

6 Designation

Example for an ordering designation of a complete coupler with nominal size DN 20 with internal thread (DF) made of copper-zinc alloy (CW614N):

Coupler EN 14420-7-20-DF- CW614N

Example for an ordering designation of a complete adapter with nominal size DN 20 with internal thread (AF) made of copper-zinc alloy (CW614N):

Adapter EN 14420-7-20-AF- CW614N

Example for an ordering designation of the main gasket pos.No 5with nominal size DN 20 made of nitrile butadiene rubber (NBR):

Main gasket EN 14420-7-5-20-NBR

7 Dimensions

7.1 General

Details,which are not fixed,shall be chosen by the manufacturer suitably.
General tolerances shall be according to EN 22768.

7.2 Coupler types

7.2.1 Coupler type (item No 1 a)

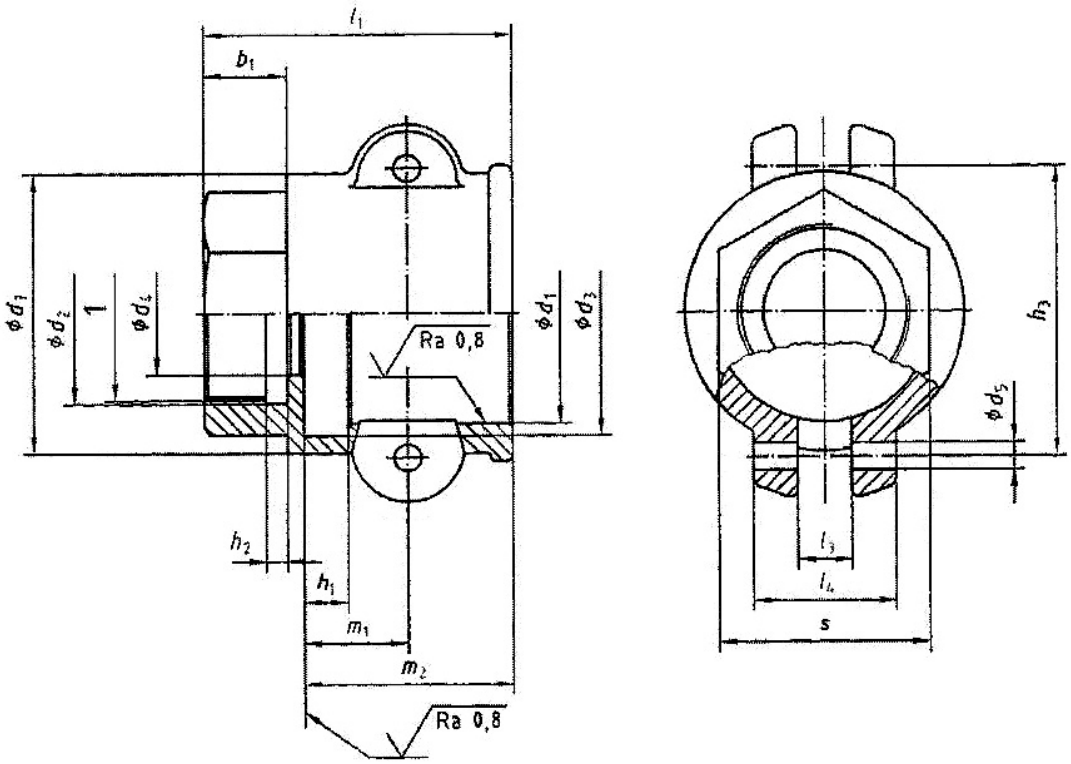

Key

1 d_6 Threa according to Table 2

Figure 3—Coupler type DF

Table 3—Coupler type DF

Dimensions in millimetres

DN	*d*1 ±0.1	*d*2 min.	*d*3 ±0.2	*d*4	*d*5 H8	*d*7 +0.2 0	*h*1 ±0.2	*h*2 0 -0.2	*h*3 max.	*l*1 min.	*l*3 min.	*l*4 min.	*m*1 +1 -0	*m*2 max.	*b*1 min.	*S*[a]
20	32.4	41	36	18	4	26.5	6.5	3	42.5	45	8	21	15.2	30.5	12	32
25	37.3	47	40.8	24	5.4	33.5	7.3	4	50	53	9.5	25	19	36	14	41
32	46	57	51	32	6.3	42.5			58.5	59	12	33	21.8	41.5		50
40	54	64	57	38		48.5			66	65				43	18	60
50	63.8	75	68	48		60.5			75.5	73			26.3	50	20	70
65	76.5	90	80.7	60		76.5		4.5	88.5	77.5			25.6	51	22	85
80	92.2	106	95.8	76	8	88.5			107.5	81	16	37	27.5	53	24	100
100	120.3	137	125.2	100		114.5			135.5	85.5				56	25	130

a This width across flats according to ISO 272 shall be used preferably.

7.2.2 Coupler type BF (item No 1 b)

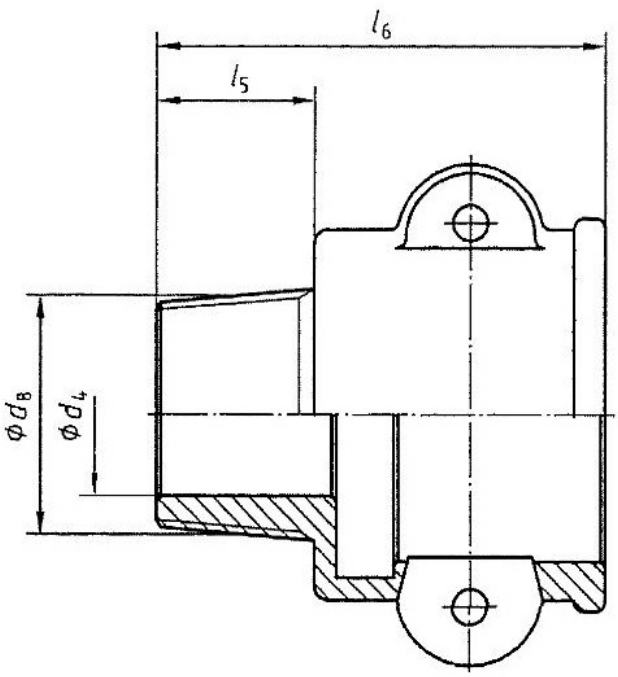

Figure 4—Coupler type BF

Table 4—Coupler type BF

Dimensions in millimetres

DN	*d*8 thread according to EN 10226-1	*l*5[a] min.	*l*6 min.
20	R3/4	16	51
25	R1	21	60
32	R1 1/4	24	69
40	R1 1/2		71
50	R2	28	81
65	R2 1/2	33	88
80	R3	36	93
100	R4	42	102

a It may be agreed upon shorter external thread lengths for flat sealed connections.In this case the dimensions *l*5 min.and *l*6 min.are shortened appropriately.

Other dimensions and specifications see 7.2.1

7.2.3 Coupler type DW (item No 1 c)

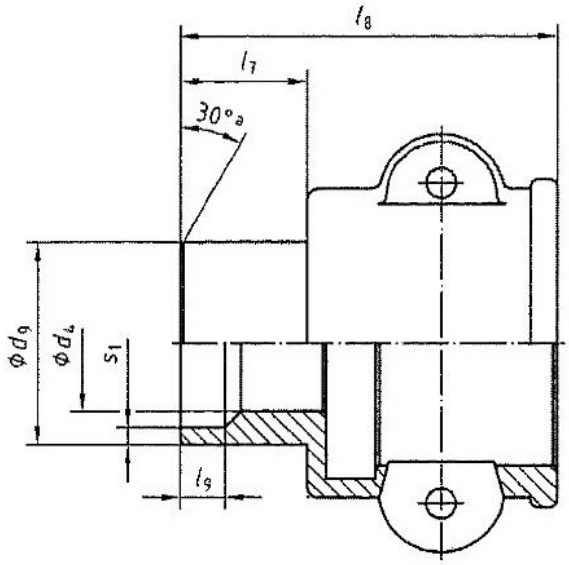

Table 5—Coupler type DW

Dimensions in millimetres

DN	d_9 min.	l_7 min.	l_8 min.	l_9 min.	S_1 min.
20	26.9	17	50	6	2.3
25	33.7	19	56	6.5	2.6
32	42.4	22	67		
40	48.3		69		
50	60.3	24	77	7.5	2.9
65	76.1	26	81.5		
80	88.9		83	8	3.2
100	114.3		86.5	9	3.6

Other dimensions and specifications see 7.2.1

a Weld chamfer according to the option of the manufacturer

Figure 5—Coupler type DW

7.2.4 Coupler type CC (item No 1 d)

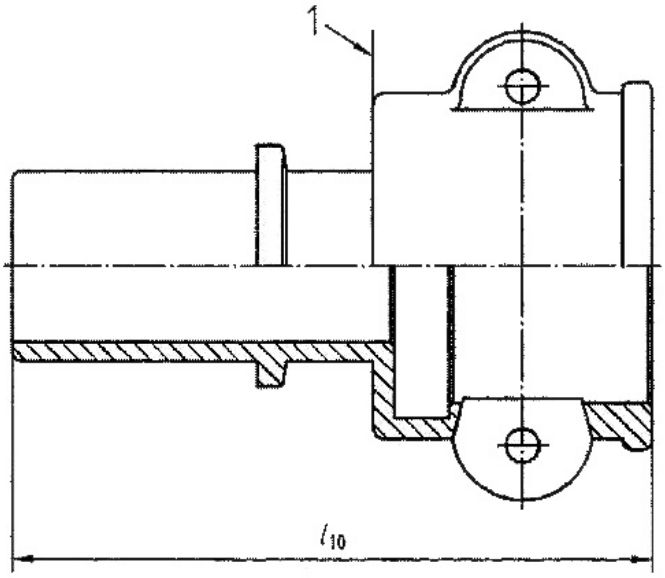

Table 6—Coupler type CC

Dimensions in millimetres

DN	l_{10} min.
20	76
25	82
32	88
40	90
50	103
65	119.5
80	125
100	169.5

Other dimensions and specifications see 7.2.1

1 Hose side part of hose tail:
dimensions shall be according to EN 14420-2

Figure 6—Coupler type CC

7.2.5 Dust cap,Coupler type DC (item No 1 e)

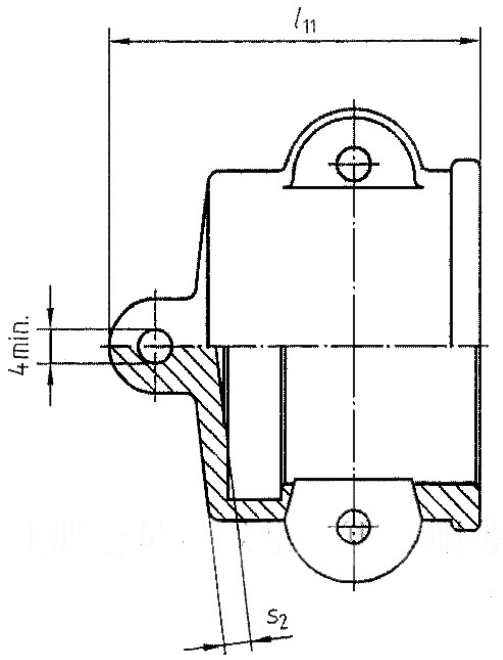

Figure 7—Dust cap,Coupler type DC

Table 7—Dust cap,Coupler type DC

Dimensions in millimetres

DN	l_{11} min.	S_2 min.
20	45	2.4
25	51	
32	57	3.2
40	59	
50	65	
65	68.5	4.0
80	70	
100	74.5	5.6

Other dimensions and specifications see 7.2.1

7.3 Cam arm (item No 2)

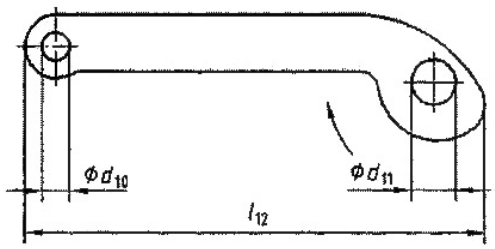

Other dimensions at manufacturer’s option.Is shall be possible to couple male and female coupling parts and the lever curve (see area marked with an arrow) shall be equal or decreasing at this area to preserve the eccentricity and prevent from self acting opening of the levers in case of shaking and vibrating operation.

Figure 8—Cam arm

Table 8—Cam arm

Dimensions in millimetres

DN	d_{10} min.	d_{11} +0.2	l_{12} min.	Thickness S_3 min.
20	4	4.1	40	7.5
25		5.5	46	9.1
32		6.4	67	11
40				
50				
65				
80	6	8.1	78	14
100				

7.4 Pin (item No 3)

During assembly pins shall be headed preferably, other kinds of fastening are permitted.

The pin shall be secure in both ears.

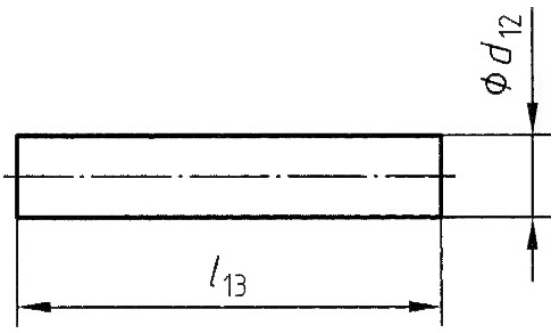

Figure 9—Pin

Table 9—Pin

Dimensions in millimetres

DN	d_{12} H11	l_{13} min.
20	4	20
25	5.4	26
32	6.3	33
40		
50		
65		
80	8	35
100		

7.5 Ring (item No 4)

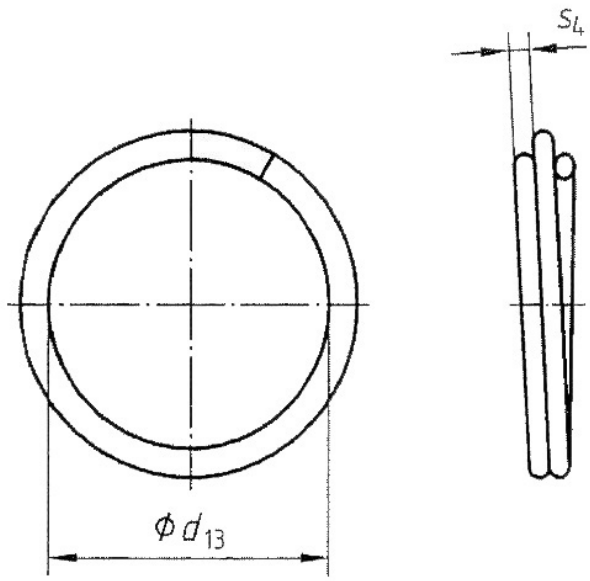

Figure 10—Ring

Table 10—Ring

DN	d_{13}	S_4	Number of turns min.
20	25	1.8	2
25			
32	33	2.4	
40			
50			
65			
80	39	2.6	3
100			

7.6 Main gasket (item No 5)

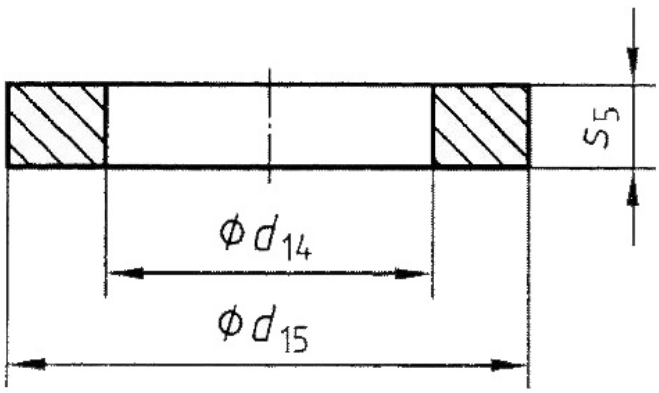

Other forms to be agreed between manufacturer and purchaser.

Figure 11—Main gasket

Table 11—Main gasket

DN	d_{14}	d_{15}	S_5
20	22	35	5.5
25	27	40	6.4
32	35	50	
40	41	56	
50	51	67	
65	60	80	
80	76	95	
100	102	124	

7.7 Thread gasket (item No 6)

See EN 14420-5.

7.8 Adapter types

7.8.1 Adapter type AF (item No 8 a)

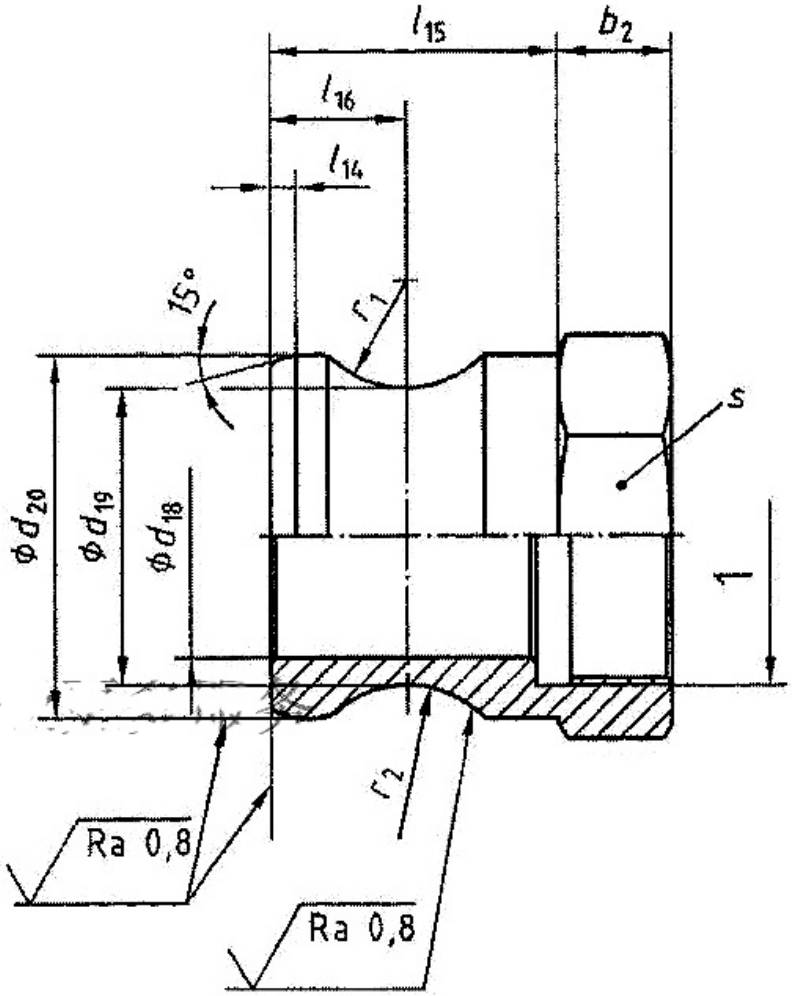

Key
1 Thread shall be according to EN 14420-5
Number of flats at manufacturer's A1 discretion A1 .

Figure 12—Adapter type AF

Figure 12—Adapter type AF

Dimensions in millimetres

<table>
<tr><th>DN</th><th>d_{18}
max</th><th>d_{19}
0
-0.15</th><th>d_{20}
±0.1</th><th>l_{14}</th><th>l_{15}
min.</th><th>l_{16}
0
-0.15</th><th>r_1
0.15
0</th><th>r_2
0
-0.4</th><th>b_2
min.</th><th>S^a
min.</th></tr>
<tr><td>20</td><td>21.5</td><td>26.3</td><td>32.1</td><td>2.4</td><td>25.4</td><td>11.96</td><td rowspan="2">9.45</td><td>1.6</td><td>10</td><td>32</td></tr>
<tr><td>25</td><td>24.2</td><td>29.1</td><td>36.7</td><td rowspan="3">3.2</td><td>33.3</td><td>14.35</td><td>2.4</td><td>16</td><td>41</td></tr>
<tr><td>32</td><td>28.2</td><td>35.3</td><td>45.5</td><td>39.6</td><td rowspan="2">17.53</td><td rowspan="3">11.05</td><td rowspan="5">3.2</td><td>17.5</td><td>50</td></tr>
<tr><td>40</td><td>36.5</td><td>42.9</td><td>53.4</td><td>41.2</td><td>21.5</td><td>60</td></tr>
<tr><td>50</td><td>46</td><td>52.5</td><td>63</td><td>47.5</td><td rowspan="2">21.54</td><td>23.5</td><td>70</td></tr>
<tr><td>65</td><td>56.6</td><td>64.6</td><td>75.8</td><td rowspan="2">4.8</td><td>49.2</td><td>26</td><td>85</td></tr>
<tr><td>80</td><td>73.3</td><td>81.3</td><td>91.5</td><td>50.8</td><td rowspan="2">22.73</td><td rowspan="2">12.62</td><td rowspan="2">28</td><td>100</td></tr>
<tr><td>100</td><td>98.2</td><td>109.4</td><td>119.5</td><td>5.6</td><td>52.3</td><td>130</td></tr>
<tr><td colspan="11">a See Table 3.</td></tr>
</table>

7.8.2 Adapter type FF (item No 8 b)

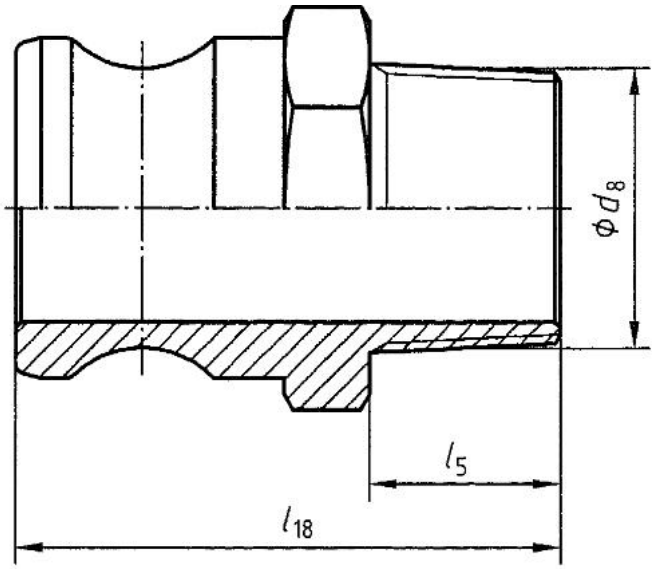

Figure 13—Adapter type FF

Table 13—Adapter type FF

Dimensions in millimetres

DN	l_{18} min.
20	51.5
25	62.5
32	77
40	78.5
50	88.5
65	99.5
80	104
100	117.5

d_8,l_5 see 7.2.2

Other dimensions and specifications see 7.8.1

7.8.3 Adapter type AW (item No 8 c)

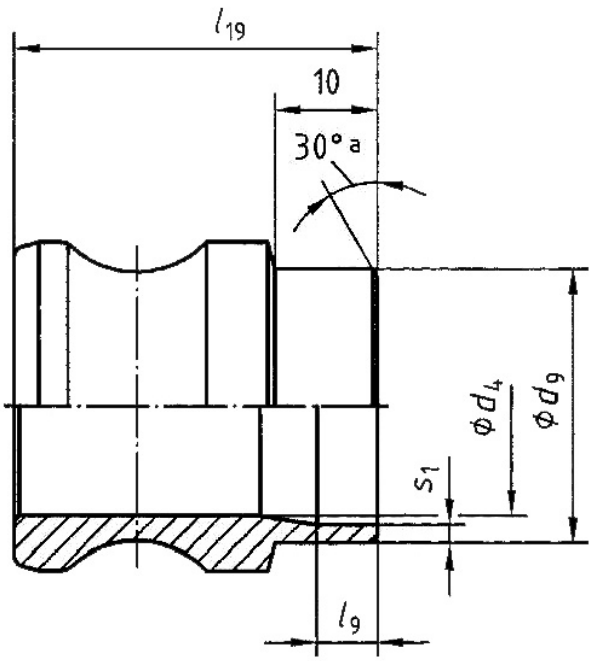

Weld chamfer according to the option of the manufacturer

Table 14—Adapter type AW

Dimensions in millimetres

DN	l_{19} min.
20	35.5
25	43.5
32	50
40	51.5
50	57.5
65	59.5
80	60
100	62.6

d9,l9,S1 see 7.2.3

Other dimensions and specifications see 7.8.1

Figure 14—Adapter type AW

7.8.4 Adapter type EC (item No 8 d)

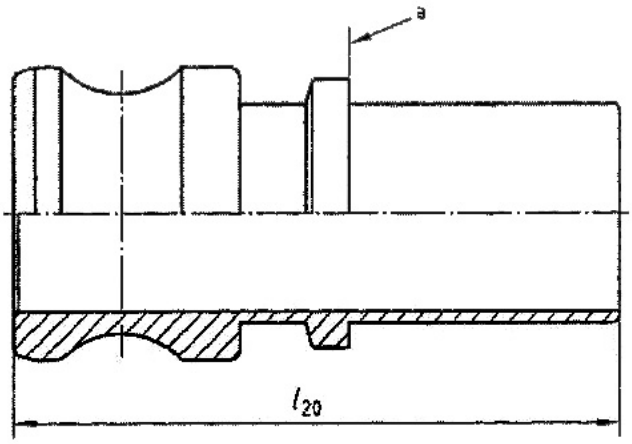

Key

a Hose side part of hose tail:dimensions shall be according to EN 14420-2

Figure 15—Adapter type EC

Table 15—Adapter type EC

DN	l_{20} min.
20	68.5
25	76.5
32	83
40	84.5
50	97.5
65	113.5
80	119
100	161.5

Other dimensions and specifications see 7.8.1

7.8.5 Dust plug,Adapter type DP (item No 8 e)

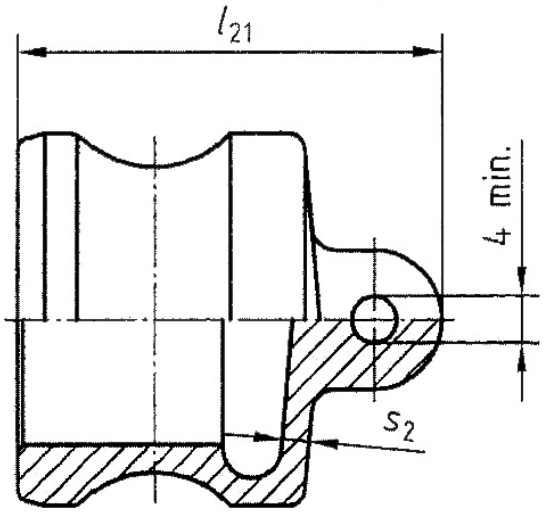

Figure 16—Dust plug,Adapter type DP

Table 16—Dust plug,Adapter type DP

DN	l_{21} min.
20	37
25	45
32	52
40	53
50	59
65	62
80	64
100	66

S2 see 7.2.5

Other dimensions and specifications see 7.8.1

8 Materials

8.1 General

Parts shall be manufactured from the materials specified below.If nothing else agreed upon,the manufacturer takes a suitable choice from the listed materials.

Whatever the kind of manufacturing procedure is,the minimum mechanical characteristics shall be equivalent to the mechanical characteristics of investment castion (in case of stainless steel) using the materials specified in this standard.

8.2 Coupler and adapter body

Couplers and adapter bodies shall be made of the following materials:

copper-zinc alloy

CuZn39PB3 material number CW614N in material condition H080 according to EN 12420

CuZn40PB2 material number CW617N in material condition H080 according to EN 12420

GK-CuZn37Pb material number 2.0340.02 according to EN 1982

or

stainless steel

X2CrNIMo17-12-2 material number 1.4404 according to EN 10088-1

X5CrNIMo17-12-2 material number 1.4401 according to EN 10088-1

X6CrNIMoTi17-12-2 material number 1.4571 according to EN 10088-1

GX5CrNIMoNb19-11-2 material number 1.4581 according to EN 10213-4

GX5CrNIMo19-11-2 material number 1.4408 according to EN 10213-4

X2CrNIMoN25-7-4 material number 1.4410 according to EN 10088-1

or

Copper tin alloy

CuSn5Zn5Pb5 material number CC491K according to EN 1982

8.3 Cam arm (item No 2)

Cam arm shall be made of the following materials:

X2CrNIMo17-12-2 material number 1.4404 according to EN 10088-1

X5CrNIMo17-12-2 material number 1.4401 according to EN 10088-1

X2CrNIMoN25-7-4 material number 1.4410 according to EN 10088-1

8.4 Pin (item No 3)

Pins shall be made of the following materials:

X2CrNIMo17-12-2 material number 1.4404 according to EN 10088-1

8.5 Ring (item No 4)

Rings shall be made of the following materials:

X10CrNi18-8 material number 1.4310 according to EN 10088-1

8.6 Main gasket (item No 5)

Main gaskets shall be made of the following materials:

Nitrile butadiene rubber (NBR) gasket and flat-sealed

Nitrile butadiene rubber (NBR),IRHD hardness 60±5 according to ISO 48

Fluor rubber (FPM) (e.g.Viton) or CSM (e.g.Hypalon) or PTFE encapsulated,IRHD hardness 70±5 according to ISO 48.
The gasket selected shall be suitable to resist the product conveyed.
Use non-asbestos materials for gaskets.

8.7 Thread gasket (item No 6)

Thread gaskets shall be made of the following materials:

Polyurethane (PUR),hydrolytically stable,IRHD hardness 90±0.5 according to ISO 48
Polytetrafluoroethylene (PTFE)
Nitrile butadiene rubber (NBR)
Fluor rubber (FPM)
Ethylene propylene rubber/plastics (EPDM)

The gasket selected shall be suitable to resist the product conveyed.

9 Marking

Bodies and male parts of the cam locking coupling shall be durably marked on the outside as follwos:

— EN 14420－7;
— name of manufacturer or trademark;
— type and nominal size DN;
— material number.

10 Type approval testing and quality control

Shall be according to EN 14420-1.

Annex A
(normative)

Gauges for cam-locking coupling

A.1 Dimensions and designation

Details not specified in this standard are to be chosen as appropriate.Only the dimensions given in Table A.1 shall be complied with.

Tolerances shall be according to EN 22768-1 and EN 22768-2.

DN 20 to DN 100

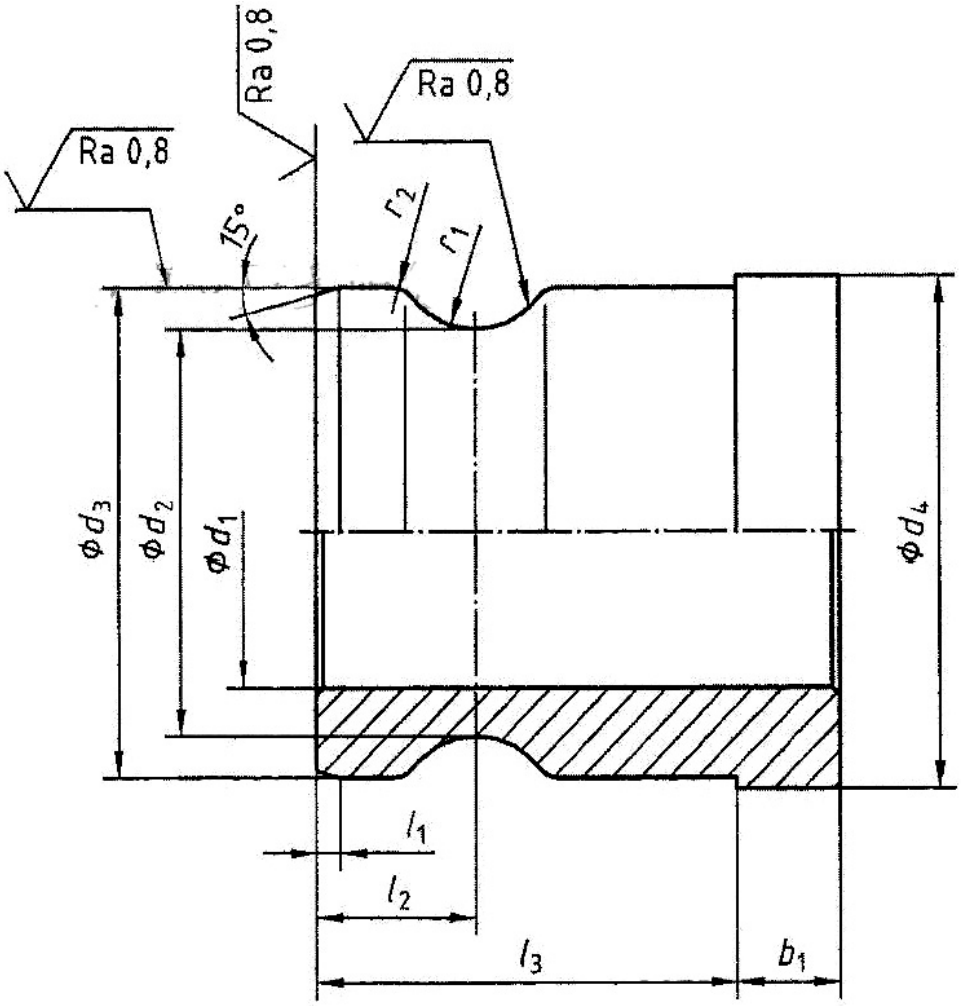

Figure A.1—Gauge A1

Designation of a gauge A1 for a cam coupling with nominal size DN 50:

Gauge EN 14420-7—A1—50

Table A.1—Dimensions

Dimensions in millimetres

DN	d_1 ±0.2	d_2 ±0.01	d_3 ±0.01	d_4 ±0.2	l_1 ±0.2	l_2 -0.01	l_3 ±0.2	r_1 ±0.01	r_2 ±0.1	b_1 ±0.2
20	—	26.29	32.11	14	2.4	11.96	45	9.45	1.6	12
25	—	29.06	36.73	41	3.2	14.35	45	9.45	2.4	12
32	—	35.26	45.52	50	3.2	17.53	51	11.05	3.2	12
40	—	42.93	53.47	60	3.2	17.53	55	11.05	3.2	13
50	—	52.45	63.09	66	3.2	21.54	57	11.05	3.2	14
65	—	64.64	75.82	77	4.8	21.54	57	11.05	3.2	14
80	—	81.33	91.54	102	4.8	22.73	64	12.62	3.2	14
100	55	109.4	119.58	128	5.6	22.73	64	12.62	3.2	14

A.2 Material

Gauge body: Material number 1.0601—Symbol C 60,or equivalent in mechanical resistance according to EN 10083-2.

Heat treated and surface protected.

Bolt: At the discretion of the manufacturer.

Bibliography

[1] EN 10204,*Metallic products—Type of inspection documents*
[2] EN ISO 4957,*Tool steels (ISO 4957:1999)*
[3] EN ISO 6708,*Pipework components—Definition and selection of DN(nominal size)(ISO 6708:1995)*
[4] EN ISO 8330,*Rubber and plastics hoses and hose assemblies—Vocabulary (ISO 8330:1998)*